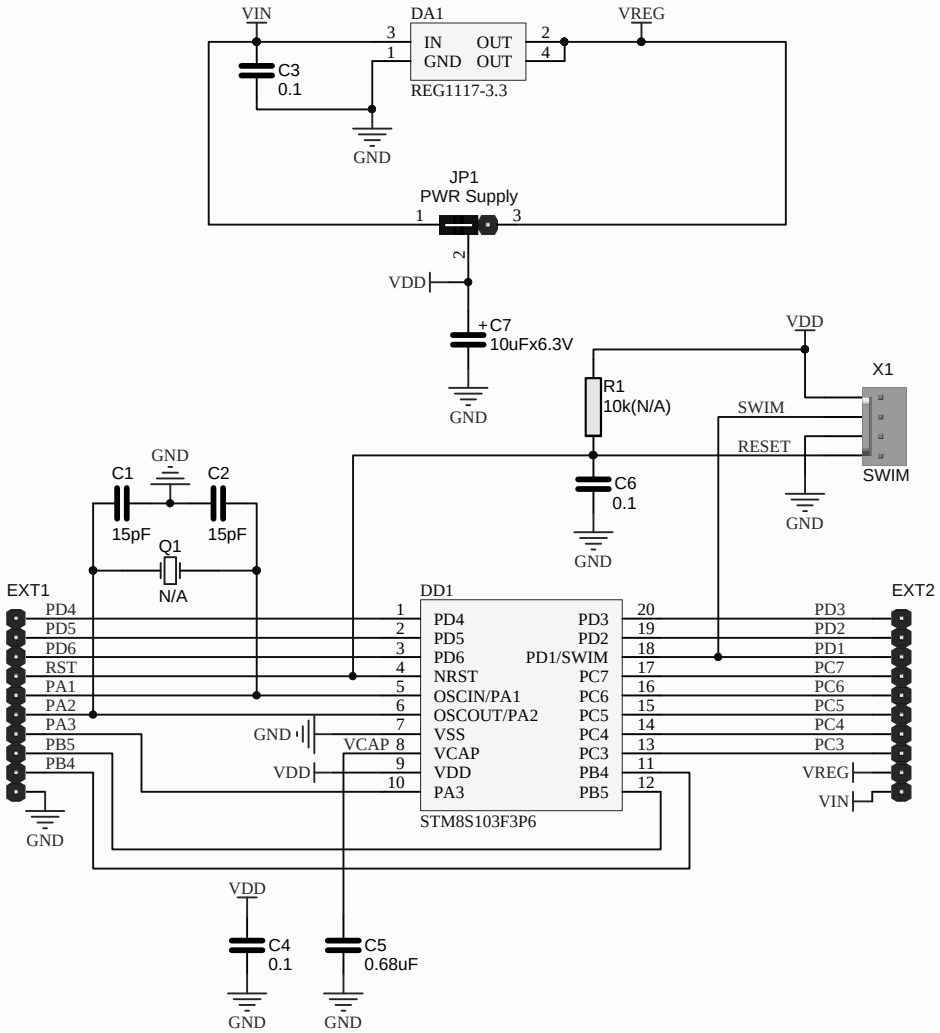

STM8S-DIP-TSSOP20