Hong Kong Office:
Optosupply Limited

Unit 1207, 12/F., Wah Yiu Industrial Centre,
30-32 Au Pui Wah Street,
Fo Tan, N.T.,
Hong Kong.
Tel: (852) 2790 5099 (8 Lines)
Fax: (852) 2342 9833
E-mail: sales-hk@optosupply.com
Website: www.optosupply.com

香港寫字樓:
光谷有限公司
香港新界火炭坳背灣街30-32號華耀工業中心12樓1207室

Factory:
Optosupply Electronics (SZ) Limited

Optosupply Industrial Zone,
South Dabu, Longhu Road,
Longdong Village, Longgang Town,
Shenzhen, P.RC.
Tel: (86-755) 8484 6601 (12 Lines)
Fax:(86-755) 8484 6596

工廠:
光源電子（深圳）有限公司
深圳市龍崗鎮龍東村龍湖路大埔南光源工業區

LED

OptoSupply® OPTOELECTRONICS PRODUCTS 2010-2011 Catalogue

OptoSupply® OPTOELECTRONICS PRODUCTS 2010-2011 Catalogue

OPTOSUPPLY LIMITED

OptoSupply®

2010－2011 Catalogue

LED & Application Technologies

About OptoSupply

We are a Hong Kong based LED manufacturer with our headquarter in Hong Kong and wholly owned factory located in Shenzhen of China. Owning the advance automatic machines and professional engineers. We strive to serve our worldwide customers with the full range of LED models at the most reasonable price vs. the highest brightness and the best quality and customer service.

Optosupply Limited

LED Plasma Cleaner

Main Products:

- Through-Hole LED
- SMD LED
- Super Flux LED
- Hight Power LED
- LED Light Strip
- Automotive Light
- OEM (original equipment manufacturing) Product
- ODM (original design manufacturing) Product

Achievement:

- Founded in 2001 in Hong Kong
- All factories awarded ISO9001:2000 accreditation since 2003
- Expanded LED lamp production capacity to 2KK per day since 2004
- Moved factory to LongGang since November 2004
- Expanded manufacturing floor space to 5,0000 square meter in 2004
- All of our LED meet RoHS compliance since 2004
- 2008 got the REACH SVHC certification
- 2009 got the ISO 9001:2008 and ISO14001:2004 certification.
- 2009 added one New SMD Production.

Manufactory Technology

Through continuous research and development, OptoSupply pioneer applications for LEDs that create new value for our customers. The Group's dedicated R & D team is committed to developing innovative new applications for LED components. As OptoSupply engineers explore the immense untapped potential of LED technology, one of the Group's top priorities is to create new applications to make our customers' dreams become reality.

To achieve its goals, our R & D team focuses on three directions, namely materials, process and optics innovation. We strive to improve LED performance by deploying non-imaging optics technique, including ray tracing and LED light source optical modeling.

From deploying vertical integration to ensuring flexibility and speed, OptoSupply manufacturing facilities are engineered to meet the diverse needs of our customers and OEM partners worldwide.

LED Lamp Assembly

We have been improving our production processes and environment continuously. Our own in-house production lines are fully automated, key machines include wire and die bonding, auto encapsulation, auto Bin classification and tape & reel packaging which are imported from overseas. We undertake all the production processes in class 10K clean room with temperature, humidity and ESD control.

LED Lamp Bond Machine

Quality Control

OptoSupply 's devotion to quality control is never-ending. In addition to attaining ISO9001:2000 quality accreditation, OptoSupply has established its own independent Quality Engineering Centre, which comprises three individual laboratories:

- Reliability Test Lab
- Photometric Lab
- Failure Analysis Lab

These laboratories conduct a wide array of reliability tests - including tests for shock resistance, life span and thermal shock - to ensure that only the highest quality OptoSupply products are delivered to our valuable customers. OptoSupply 's quality assurance experts are devoted to achieving:

- Precision emission patterns
- High degree of color consistency
- High durability
- High reliability to withstand the temperature, humidity and ultraviolet
- Conditions of real outdoor environments

Top View SMD Bin Sorter

LED Application Production Line

We continue to focus on the development of related LED products application in order to extend the company's production line. We have been improving Our production processes and environment continuously. Our own In-house production lines are fully automated key machines, include Lead-Free N2 /AIR Reflow Soldering Machine and Automatic Lead-Free Dual Wave Soldering Machine.

This data shows typical values.

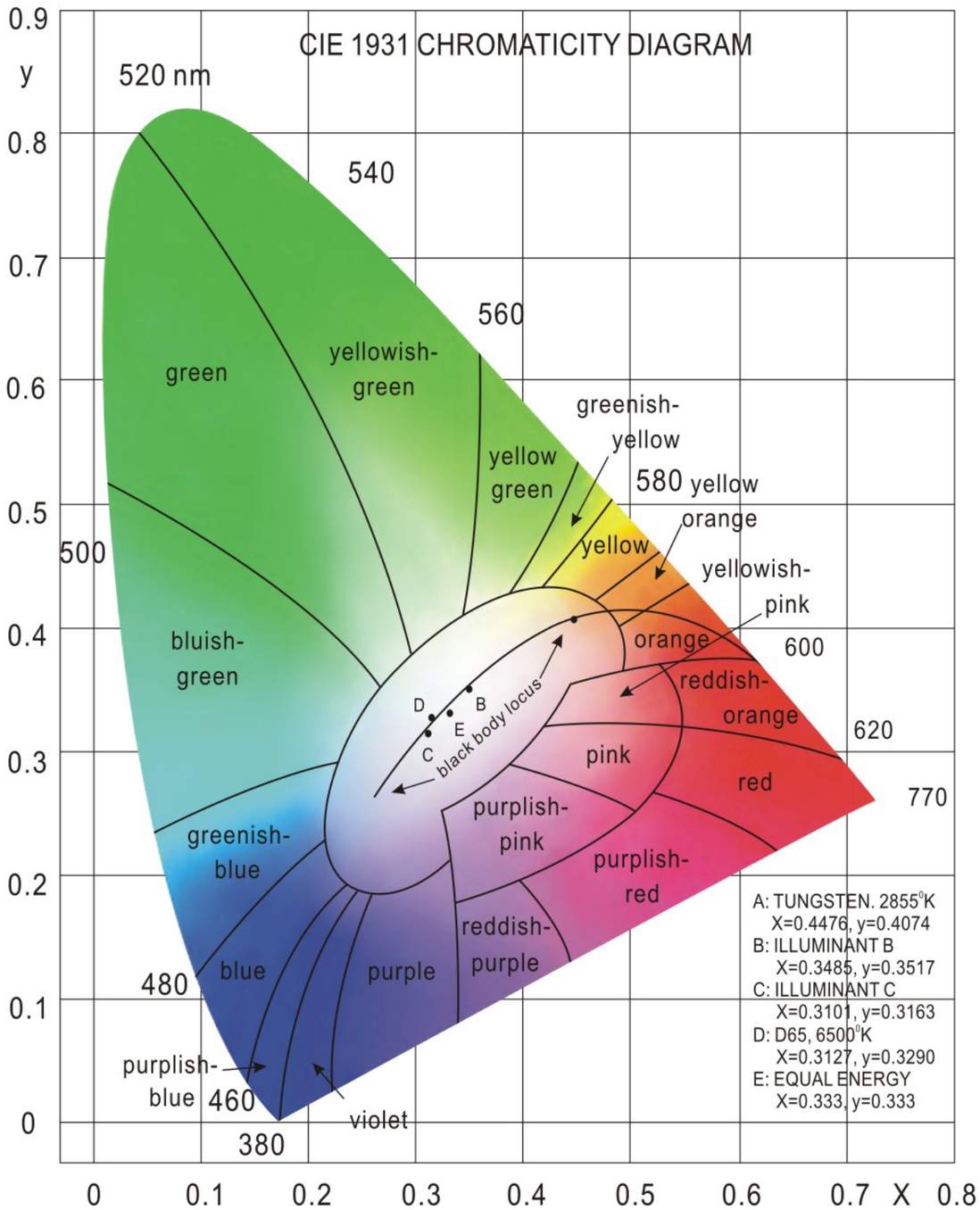

OS AB C D EF G H I - J - KL MN PQ

- PQ — VF Range
- MN — Domi Wavelength Range
- KL — Iv Range
- J — Package Type
- I — Package Outline
- H — Epoxy Color / plating Sn (I, Water Clear & No Plating Sn; A Water Clear & Plating Sn; ...)
- G — Emitting Viewing Angle (0, 8Degree; 1, 15Degree; 3, 30Degree; 6, 60Degree; A, 100Degree; E, 140Degree; ...)
- EF — Prodoct Type And Mold Size (3X, 3mm round; 5X, 5mm Round; aX, 10mm Round; ...)
- D — Technology Type (A, Common; L, Long Lifetime; ...)
- C — Chip Type (L, Low Bright; H, High Bright; S, Super Bright; D, Deluxe Bright; G, Giga Bright; P, Premium Bright; C, Commercial Bright; M, Phoenix Bright; ...)
- AB — Emitting Color (RX, Red; YX, Yellow; BX, Blue; GX, Green; OX, Orange; WX, Cool White; MX, Warm White; ...)
- OS — OPTOSUPPLY

Intensity Standard

Bin	Range(mcd)	Bin	Range(mcd)	Bin	Range(mcd)	Bin	Range(mcd)
A	1-20	I	330-500	Q	5800-7000	Z	25000-30000
B	20-30	J	500-750	R	7000-8400	3	30000-36000
C	30-45	K	750-1120	S	8400-10000	4	36000-43000
D	45-68	L	1120-1560	T	10000-12000	5	43000-50000
E	68-100	M	1560-2180	U	12000-14400	6	50000-60000
F	100-150	N	2180-3000	V	14400-18000	7	60000-72000
G	150-220	O	3000-4200	W	18000-22000	8	72000-85000
H	220-330	P	4200-5800	Y	22000-25000	9	85000-100000

Forward Voltage

Bin	Range(V)	Bin	Range(V)	Bin	Range(V)	Bin	Range(V)
11	<1.6	66	2.4-2.6	BB	3.4-3.6	GG	4.4-4.6
22	1.6-1.8	77	2.6-2.8	CC	3.6-3.8	HH	4.6-4.8
33	1.8-2.0	88	2.8-3.0	DD	3.8-4.0	II	4.8-5.0
44	2.0-2.2	99	3.0-3.2	EE	4.0-4.2	JJ	5.0-5.2
55	2.2-2.4	AA	3.2-3.4	FF	4.2-4.4	KK	5.2-5.4

LED Application

LED Light Strip

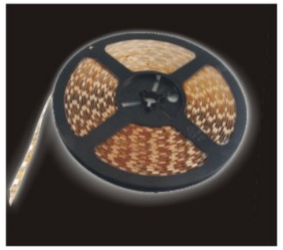

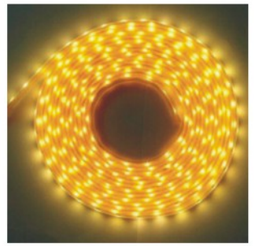

LED Tester

- **Through-Hole LED TEST**
- **Super Flux LED TEST**
- **Bi-Color LED TEST**
- **Multiple Current Selection for 2mA, 5mA, 10mA, 20mA, 30mA, 50mA, 70mA, 150mA,**
- **Use 9V Battery**
- **Easy to carry**

OS A B CD E FG H I - JKLMNOPQR - S

- S — Package Type
- JKLMNOPQR — LED Part NO
- I — Connector Type
- H — Operating Voltage
- FG — LED Quantity
- E — PCB Width
- CD — PCB Length
- B — PCB Type
- A — LED Light Strip
- OS — Optosupply

OS	A	B	CD	E
Optosupply	**LED Light Strip**	**PCB Type**	**PCB Length**	**PCB Width**
	M= Light Strip	F=FPC Yellow	02=2CM	C=Circular
	W= Silica Gel Waterproof Light Strip	W=FR4 White	38=38CM	8=8MM
		Y=94V0 Yellow	50=50CM	E=10MM
		H=FPC White	12=12CM	G=12.6MM
		G=FR4 Green	46=45.7CM	K=21MM
		X= Other	XX= Other	X= Other

FG	H	I	JKLMNOPQR	S
LED Quantity	**Operating Voltage**	**Connector Type**	**LED Part NO**	**Package Type**
04=4LED	E=10V	S=Straight	Refer to LED	A= Single
27=27LED	G=12V	C= Curved	Part Number	D= 5M /Roll
37=37LED	H=14V	P=Pad Common Cathode		G= 10M /Roll
	K=24V	M=Molex		
XX= Other	X= Other	X= Other	X= Other	X= Other

LED Ribbon Light

Model No: (REV. C2)
OSMF50830GP-W5DLS1C1A-X

■ Typical Performance (Ta=25C)

Items	Symbol	Min	Typ	Max	Units
LED Module Power	Pm	-	2.4	4.2	w
Input Voltage(DC)	Vi	-	12	14	V
Product input Current	If	-	200	300	mA
Beam Pattern	BP	-	120	-	Deg
Total Length of Modules (Including Pin)	Lmod.	-	500	-	mm
Net Weight	Wei.	---	5.5	---	g

Application:

- •Channel letter signs
- •Indirect accent decor light
- •Large area back lighting
- •Under counter light
- •Decorate building 's contour
- •Substitute neon light
- •Other colors:red,yellow,blue orange,green,white, warm white,etc.

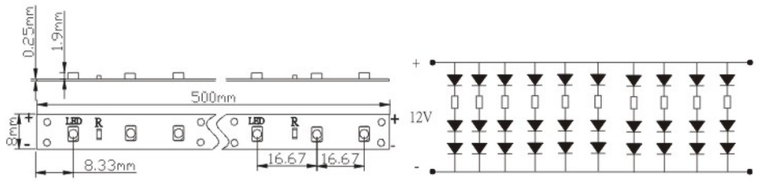

LED Ribbon Light

Model No: (REV. C2)
OSMH50830GP-W5DLS1C1A-X

■ Typical Performance (Ta=25C)

Items	Symbol	Min	Typ	Max	Units
LED Module Power	Pm	-	2.4	4.2	w
Input Voltage(DC)	Vi	-	12	14	V
Product input Current	If	-	200	300	mA
Beam Pattern	BP	-	120	-	Deg
Total Length of Modules (Including Pin)	Lmod.	-	500	-	mm
Net Weight	Wei.	---	6	---	g

Application:

- •Channel letter signs
- •Indirect accent decor light
- •Large area back lighting
- •Under counter light
- •Decorate building 's contour
- •Substitute neon light
- •Other colors:red,yellow,blue orange,green,white, warm white,etc.

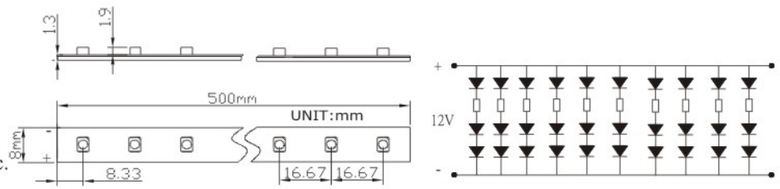

RGB Ribbon Light

Model No: (REV. C2)
OSMF50E30GA-TFMBS4C1A-X

■ Typical Performance (Ta=25C)

Items	Symbol	Min	Typ	Max	Units
LED Module Power	Pm	-	3.6	6.3	w
Input Voltage(DC)	Vi	-	12	14	V
Product input Current	If	-	300	450	mA
Beam Pattern	BP	-	120	-	Deg
Total Length of Modules (Including Pin)	Lmod.	-	500	-	mm
Net Werght	Wei.	---	6	---	g

Application:

- •Channel letter signs
- •Indirect accent decor light
- •Large area back lighting
- •Under counter light
- •Decorate building 's contour
- •Substitute neon light

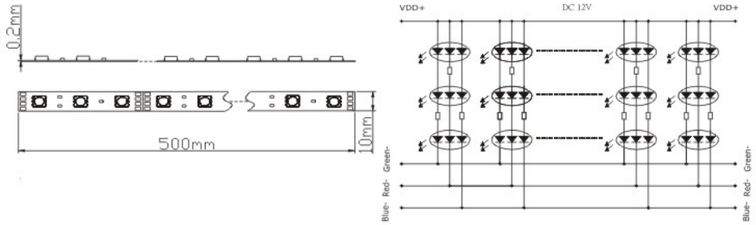

Waterproof RGB Ribbon Light

Model No: (REV. C2)
OSWBA0F30GH-TFMBS4C1A-X

■ Typical Performance (Ta=25C)

Items	Symbol	Min	Typ	Max	Units
LED Module Power	Pm	-	7.2	12.6	w
Input Voltage(DC)	Vi	-	12	14	V
Product input Current	If	-	600	900	mA
Beam Pattern	BP	-	120	-	Deg
Total Length of Modules (Including Pin)	Lmod.	-	1000	-	mm
Net Werght	Wei.	---	70	---	g

Application:

- •Channel letter signs
- •Indirect accent decor light
- •Large area back lighting
- •Under counter light
- •Decorate building 's contour
- •Substitute neon light

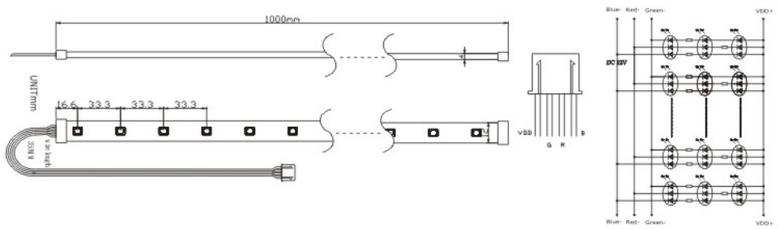

Super Flux LED PCB Module

Model No: (REV. C2)
OSMW02C04GX-W573Z2C1P-X

■ Typical Performance (Ta=25C)

Items	Symbol	Min	Typ	Max	Units
LED Module Power	Pm	-	0.96	1.68	w
Input Voltage(DC)	Vi	-	12	14	V
Product input Current	If	-	80	120	mA
Beam Pattern	BP	-	120	-	Deg
Total Length of Modules (Including Pin)	Lmod.	-	22	-	mm
Net Werght	Wei.	---	3.5	---	g

Application:

- •Channel letter signs
- •Indirect accent decor light
- •Large area back lighting
- •Under counter light
- •Decorate building 's contour
- •Substitute neon light
- •Other colors:red,yellow,blue orange,green,white, warm white,etc.

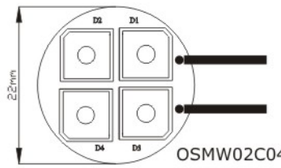

OSMW02C04GC

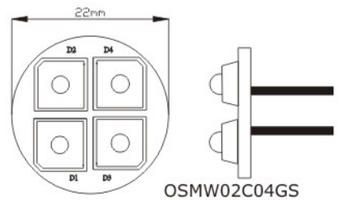

OSMW02C04GS

SMD LED PCB Module

Model No: (REV. C2)
OSMW03C12GP-W5DLS1C1A -X

■ Typical Performance (Ta=25C)

Items	Symbol	Min	Typ	Max	Units
LED Module Power	Pm	-	0.72	0.96	w
Input Voltage(DC)	Vi	-	12	16	V
Product input Current	If	-	60	60	mA
Beam Pattern	BP	-	120	-	Deg
Total Length of Modules (Including Pin)	Lmod.	-	32	-	mm
Net Werght	Wei.	---	3	---	g

Application:

- •Channel letter signs
- •Indirect accent decor light
- •Large area back lighting
- •Under counter light
- •Decorate building 's contour
- •Substitute neon light
- •Other colors:red,yellow,blue orange,green,white, warm white,etc.

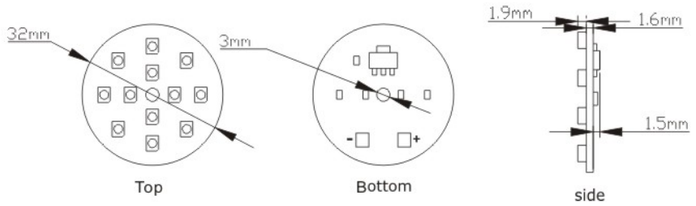

Screw Lamp

Model No: (REV. C1)
OBDX-XXXX8B31X

■ **Absolute Maximum Rating** (Ta=25℃)

Item	Symbol	Value	Unit
DC Forward Current	I_F	20	mA
Pulse Forward Current*	I_{FP}	70*1	mA
Power Dissipation	P_D	80	mW
Operating Temperature	Topr	-10~+50	℃
Storage Temperature	Tstg	-20~+70	℃

*1 Pulse width Max.10ms Duty ratio max 1/10

■Package Outline

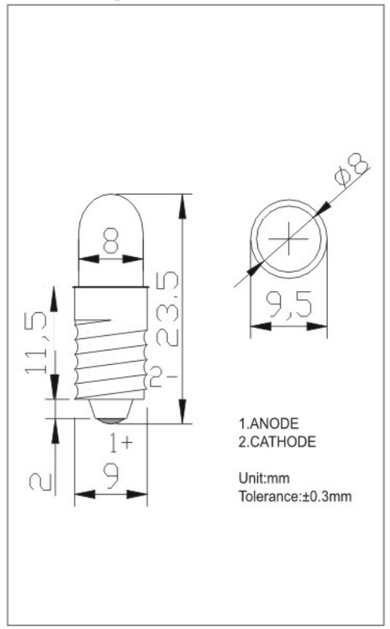

Viewing angle 30 deg
AC or DC Driver

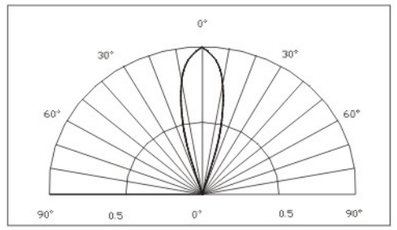

Application:

- •Small and portable lighting
- •Flashing, bicycle light
- •Torch lighting
- •Beacons lighting
- •Signal and symbol luminaire

■**Electrical And Optical Characteristics** (Ta=25℃)

Part Number*2	Emitting Color	Lens Type	Forward Voltage DC VF(V)		Chromaticity Coordinates*4 X		Chromaticity Coordinates*4 Y		Luminous Intensity IV(mcd)*3		Reverse Current IR(uA)
			Working Current:IF=20mA								
			Min.	Max.	Min.	Max.	Min.	Max.	Typ.	Max.	
OBDX-W5DK8B31F	White	Water Clear	3.5	24	0.26	0.29	0.25	0.28	18000	25000	<10
OBDX-M5DK8B31F	Warm White	Water Clear	3.5	24	0.41	0.49	0.37	0.45	9000	12000	<10
OBDX-K5DK8B31F	Pink	Water Clear	3.5	24	0.34	0.44	0.15	0.25	2100	3000	<10

■**Electrical And Optical Characteristics** (Ta=25℃)

Part Number*2	Emitting Color	Lens Type	Forward Voltage DC VF(V)		Dominant Wavelength wd(nm)*5		Luminous Intensity IV(mcd)*3		Reverse Current IR(uA)
			Working Current:IF=20mA						
			Typ.	Max.	Typ.	Max.	Typ.	Max.	
OBDX-B5SA8B31F	Blue	Water Clear	3.5	24	470	475	5200	8000	<10
OBDX-G5DA8B31F	Pure Green	Water Clear	3.5	24	525	530	20000	25000	<10
OBDX-Y5MA8B31F	Yellow	Water Clear	3	24	590	595	13000	15000	<10
OBDX-O5MA8B31F	Orange	Water Clear	3	24	605	610	13000	15000	<10
OBDX-R5MA8B31F	Red	Water Clear	3	24	625	630	13000	15000	<10

Automotive Light

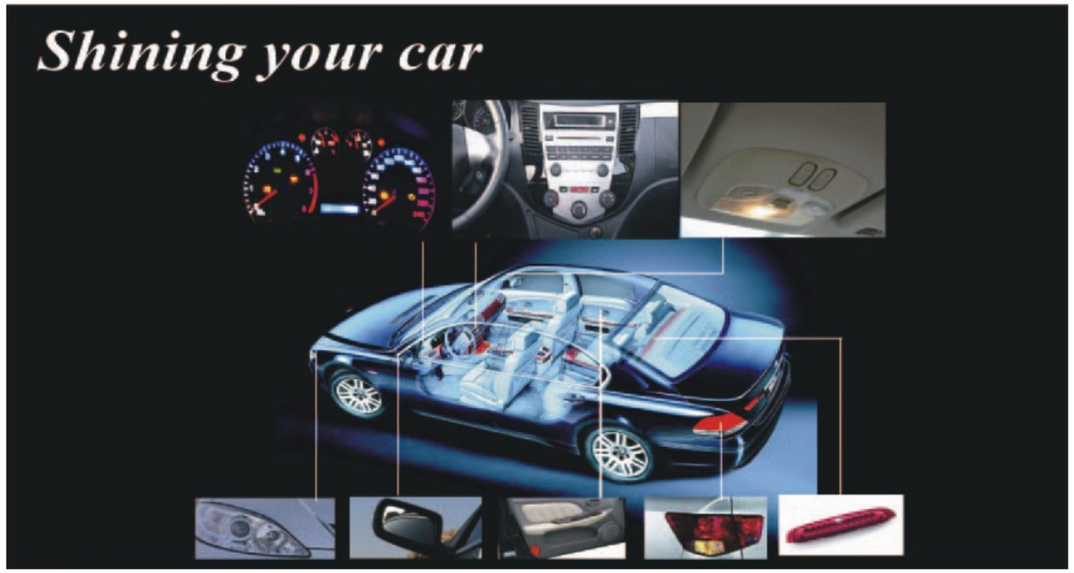

Features:

- High temperature and environmental protection
- PA material for lamp holder
- Low power consumption
- Eye protection: stroboflash, no radiation
- Energy saving
- Long life

T5 Series

T8 Series

T15 Series

T10 Series

T18 Series T20 Series T25 Series

F00 Series

High Luminous Lighting LED

The latest Lighting LED use 10*23mil Chip , which have High Luminous

Application:

- Outdoor/Indoor Lighting
- Landscape
- Personal
- Facility

Part Number*2	Emitting Color		Lens Type	Forward Voltage VF (V)		Chromaticity coordinates*4		Luminous Flux (lm)*3		Directivity 2θ1/2 (degree)	IF (mA)
						x	y				
				Typ.	Max.	Typ.	Typ.	Min.	Typ.		
Φ4.8 Straw Type											
OSW44L56A1A	●	Cool White	Water Clear	3.1	3.6	0.31	0.33	6.5	7.0	100	20
3528 PLCC2 Type											
OSW44LS1C1A	●	Cool White	Yellow Diffused	3.1	3.6	0.31	0.33	7.0	7.5	120	20
5050 PLCC6 Type											
OSW44TS4C1A	●	Cool White	Yellow Diffused	3.1	3.6	0.31	0.33	15	20	120	60

Absolute Maximum Rating **(Ta=25℃)**

Item	Symbol	Value			Unit
		OSW44L56A1A	OSW44LS1C1A	OSW44TS4C1A	
DC Forward Current	I_F	50	50	80	mA
Pulse Forward Current	I_{FP}	100*1	100*1	120*1	mA
Reverse Voltage	V_R	5			V
Power Dissipation	P_D	180	180	288	mW
Operating Temperature	Topr	-30~+85			℃
Storage Temperature	Tstg	-40~+100			℃

Traffic LED

Application:

- Traffic Light
- Traffic Signal and Letter
- Automotive Dashboard Lighting

Part Number*2	Emitting Color		Lens Type	Forward Voltage VF (V)		Dominant Wavelength Wd(nm)*5			Luminous Intensity IV (mcd)*3		Directivity 2θ1/2 (degree)	IF (mA)
				Typ.	Max.	Min.	Typ.	Max.	Min.	Typ.		
Φ 5mm Traffic Lamp Series												
OSG3DA5C31C		Bluish Green	Water Clear	3.1	3.6	500	505	510	12000	14000	30	20
OSR5PA5C31C		Red	Water Clear	2.1	2.6	620	625	630	4200	6000	30	20
OSY5PA5C31C		Yellow	Water Clear	2.1	2.6	585	590	595	4200	6000	30	20
OSR5MA5C31C		Red	Water Clear	2.1	2.6	620	625	630	7000	8000	30	20
OSY5MA5C31C		Yellow	Water Clear	2.1	2.6	585	590	595	7000	8000	30	20
Deluxe Power Φ 5 mm Traffic Lamp Series												
OSG38A5C31P		Bluish Green	Water Clear	3.1	3.6	500	505	510	25000	30000	30	50
OSR5CA5C31P		Red	Water Clear	2.1	2.6	620	625	630	18000	22000	30	70
OSY5CA5C31P		Yellow	Water Clear	2.1	2.6	585	590	595	18000	22000	30	70

Absolute Maximum Rating **(Ta=25℃)**

Item	Symbol	Value					Unit
		OSG3DA	OSR5/Y5PA	OSR5/Y5MA	OSG38A	OSR5/Y5CA	
DC Forward Current	I_F	30	50	50	50	70	mA
Pulse Forward Current	I_{FP}	100*1	120*1	120	100	120	mA
Reverse Voltage	V_R	5					V
Power Dissipation	P_D	108	130	130	180	182	mW
Operating Temperature	Topr	-30~+85					℃
Storage Temperature	Tstg	-40~+100					℃

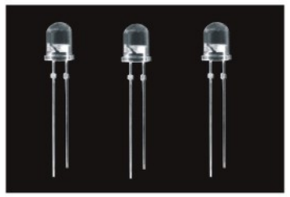

General Lighting LED

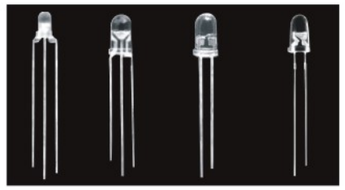

Bi-Color 3mm Bi-Color 5mm Bi-Color Flashing 5mm Bullet 5mm

Application:

- Flash Light
- Toy
- Decoration
- Illuminations

Concave 5mm Full Color 5mm Full Color Flashing 5mm Mono-Color 3mm Mono-Color 5mm

Straw 4. 8mm Mono-Color Flashing 3mm Mono-Color Flashing 5mm Flat 5mm

Lamp Type LED

Package	Part Number*2	Emitting Color		Lens Type	Forward Voltage Vdd (V)		Dominant Wavelength Wd(nm)*5			Luminous Intensity IV(mcd)*3		Directivity 2θ1/2 (degree)	IF (mA)	Blinking Cycle (Hz)*1	Duty Cycle	Absolute Maximum Rating (Ta=25℃) Vdd (V)	T_{opr} (℃)	T_{stg} (℃)	Mounting
					Typ.	Max.	Min.	Typ.	Max.	Min.	Typ.								
	Φ3 Round Mono-Color Flashing Color Type																		
	OSB5SS3131A		Blue	Water Clear	3.3	5.0	465	470	475	1560	2200	30	20	1.8	1/2	5.0	-30~+85	-40~+100	Wave Soldering
	OSG3DS3131A		Bluish Green	Water Clear	3.3	5.0	500	505	510	5800	7000	30	20	1.8	1/2	5.0	-30~+85	-40~+100	
	OSG5DS3131A		Pure Green	Water Clear	3.3	5.0	520	525	530	5800	7000	30	20	1.8	1/2	5.0	-30~+85	-40~+100	
	OSR5RS3131A		Red	Water Clear	3.3	5.0	620	625	630	1560	2000	30	20	1.8	1/2	5.0	-30~+85	-40~+100	
	OSY5RS3131A		Yellow	Water Clear	3.3	5.0	585	590	595	1560	2000	30	20	1.8	1/2	5.0	-30~+85	-40~+100	
	OSO5JS3131A		Orange	Water Clear	3.3	5.0	600	605	610	1560	2000	30	20	1.8	1/2	5.0	-30~+85	-40~+100	
	OSR5MS3131A		Red	Water Clear	3.3	5.0	620	625	630	4200	5000	30	20	1.8	1/2	5.0	-30~+85	-40~+100	
	OSY5MS3131A		Yellow	Water Clear	3.3	5.0	585	590	595	4200	5000	30	20	1.8	1/2	5.0	-30~+85	-40~+100	
	OSO5MS3131A		Orange	Water Clear	3.3	5.0	600	605	610	4200	5000	30	20	1.8	1/2	5.0	-30~+85	-40~+100	
	Φ5 Round Mono-Color Flashing Color Type																		
	OSB5SS5A31A		Blue	Water Clear	3.3	5.0	465	470	475	2000	2500	30	20	1.8	1/2	5.0	-30~+85	-40~+100	Wave Soldering
	OSG3DS5A31A		Bluish Green	Water Clear	3.3	5.0	500	505	510	12000	14400	30	20	1.8	1/2	5.0	-30~+85	-40~+100	
	OSG5DS5A31A		Pure Green	Water Clear	3.3	5.0	520	525	530	12000	14400	30	20	1.8	1/2	5.0	-30~+85	-40~+100	
	OSR5RS5A31A		Red	Water Clear	3.3	5.0	620	625	630	2000	2500	30	20	1.8	1/2	5.0	-30~+85	-40~+100	
	OSY5RS5A31A		Yellow	Water Clear	3.3	5.0	585	590	595	2000	2500	30	20	1.8	1/2	5.0	-30~+85	-40~+100	
	OSO5JS5A31A		Orange	Water Clear	3.3	5.0	600	605	610	2000	2500	30	20	1.8	1/2	5.0	-30~+85	-40~+100	
	OSR5MS5A31A		Red	Water Clear	3.3	5.0	620	625	630	5800	7000	30	20	1.8	1/2	5.0	-30~+85	-40~+100	
	OSY5MS5A31A		Yellow	Water Clear	3.3	5.0	585	590	595	5800	7000	30	20	1.8	1/2	5.0	-30~+85	-40~+100	
	OSO5MS5A31A		Orange	Water Clear	3.3	5.0	600	605	610	5800	7000	30	20	1.8	1/2	5.0	-30~+85	-40~+100	
	Φ5 Round Bi-Color Flashing Color Type																		
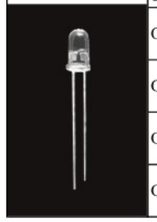	OSRBMS5A31A		Red	Water Clear	3.3	5.0	620	625	630	5800	7000	30	20	1.8	1/2	5.0	-30~+85	-40~+100	Wave Soldering
			Blue				465	470	475	2000	2500	30	20	1.8	1/2	5.0	-30~+85	-40~+100	
	OSRPMS5A31A		Red	Water Clear	3.3	5.0	620	625	630	5800	7000	30	20	1.8	1/2	5.0	-30~+85	-40~+100	
			Pure Green				520	525	530	12000	14400	30	20	1.8	1/2	5.0	-30~+85	-40~+100	
	OSYBMS5A31A		Yellow	Water Clear	3.3	5.0	585	590	595	5800	7000	30	20	1.8	1/2	5.0	-30~+85	-40~+100	
			Blue				465	470	475	2000	2500	30	20	1.8	1/2	5.0	-30~+85	-40~+100	
	OSYPMS5A31A		Yellow	Water Clear	3.3	5.0	585	590	595	5800	7000	30	20	1.8	1/2	5.0	-30~+85	-40~+100	
			Pure Green				520	525	530	12000	14400	30	20	1.8	1/2	5.0	-30~+85	-40~+100	

Package	Part Number*2	Emitting Color		Lens Type	Forward Voltage Vdd (V)		Dominant Wavelength Wd(nm)*5			Luminous Intensity IV(mcd)*3		Directivity 2θ1/2 (degree)	IF (mA)	Blinking Cycle T(S)*1	Duty Cycle	Absolute Maximum Rating (Ta=25℃) Vdd (V)	T_{opr} (℃)	T_{stg} (℃)	Mounting
					Typ.	Max.	Min.	Typ.	Max.	Min.	Typ.								
	Φ5 Round Full Color Flashing Type																		
	OST1MA5A31A		Red	Water Clear	4.5	5.0	620	625	630	7000	8400	30	20	33	-	5.0	-30~+85	-40~+100	Wave Soldering
			Blue				465	470	475	3000	4000	30	20	33	-	5.0	-30~+85	-40~+100	
			Pure Green				520	525	530	12000	14400	30	20	33	-	5.0	-30~+85	-40~+100	
	OST1MA5A32A		Red	White Diffused	4.5	5.0	620	625	630	3000	4000	30	20	33	-	5.0	-30~+85	-40~+100	
			Blue				465	470	475	1560	2180	30	20	33	-	5.0	-30~+85	-40~+100	
			Pure Green				520	525	530	5800	7000	30	20	33	-	5.0	-30~+85	-40~+100	
	OST1MC5A31A		Red	Water Clear	4.5	5.0	620	625	630	7000	8400	30	20	12	-	5.0	-30~+85	-40~+100	
			Blue				465	470	475	3000	4000	30	20	12	-	5.0	-30~+85	-40~+100	
			Pure Green				520	525	530	12000	14400	30	20	12	-	5.0	-30~+85	-40~+100	
	OST1MC5A32A		Red	White Diffused	4.5	5.0	620	625	630	3000	4000	30	20	12	-	5.0	-30~+85	-40~+100	
			Blue				465	470	475	1560	2180	30	20	12	-	5.0	-30~+85	-40~+100	
			Pure Green				520	525	530	5800	7000	30	20	12	-	5.0	-30~+85	-40~+100	

*1 Tolerance of Frequency is +20%
*2 See Table For Part Number Formation
*3 Axial Direction (Luminous Intensity)
*4 Please Refer to CIE 1931 Chromaticity Digram
*5 Devices are Sorted By 5nm Wavelength Ranges

Lamp Type LED

Package	Part Number*2	Emitting Color		Lens Type	Forward Voltage VF (V)		Dominant Wavelength Wd(nm)*5			Luminous Intensity IV(mcd)*3		Directivity 2θ1/2 (degree)	IF (mA)	Reverse Current I_R Max.(uA)	V_R (V)	Absolute Maximum Rating (Ta=25℃) I_F (mA)	I_{FP}*1 (mA)	V_R (V)	P_D (mW)	T_{opr} (℃)	T_{stg} (℃)	Mounting
					Typ.	Max.	Min.	Typ.	Max.	Min.	Typ.											
	Φ3 Round Bi-Color Type																					
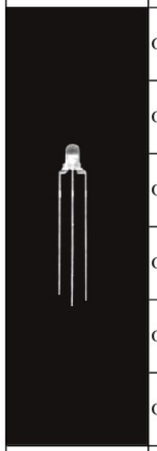	OSRGHC3131A		Red	Water Clear	2.1	2.6	620	625	630	750	1120	30	20	10	5	30	100	5	78	-30~+85	-40~+100	Wave Soldering
			Yellow Green		2.1	2.6	565	570	575	500	800	30	20	10	5	30	100	5	78	-30~+85	-40~+100	
	OSRBMC3131A		Red	Water Clear	2.1	2.6	620	625	630	5800	6500	30	20	10	5	30	100	5	78	-30~+85	-40~+100	
			Blue		3.1	3.6	465	470	475	2180	3000	30	20	10	5	30	100	5	108	-30~+85	-40~+100	
	OSYGHC3131A		Yellow	Water Clear	2.1	2.6	585	590	595	750	1120	30	20	10	5	30	100	5	78	-30~+85	-40~+100	
			Yellow Green		2.1	2.6	565	570	575	500	800	30	20	10	5	30	100	5	78	-30~+85	-40~+100	
	OSRGHC3132A		Red	White Diffused	2.1	2.6	620	625	630	330	550	30	20	10	5	30	100	5	78	-30~+85	-40~+100	
			Yellow Green		2.1	2.6	565	570	575	330	400	30	20	10	5	30	100	5	78	-30~+85	-40~+100	
	OSRBMC3132A		Red	White Diffused	2.1	2.6	620	625	630	2180	3300	30	20	10	5	30	100	5	78	-30~+85	-40~+100	
			Blue		3.1	3.6	465	470	475	1200	1560	30	20	10	5	30	100	5	108	-30~+85	-40~+100	
	OSYGHC3132A		Yellow	White Diffused	2.1	2.6	585	590	595	330	550	30	20	10	5	30	100	5	78	-30~+85	-40~+100	
			Yellow Green		2.1	2.6	565	570	575	330	400	30	20	10	5	30	100	5	78	-30~+85	-40~+100	
	Φ5 Round Bi-Color Type																					
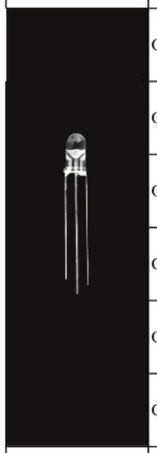	OSRGHC5B31A		Red	Water Clear	2.1	2.6	620	625	630	1120	1560	30	20	10	5	30	100	5	78	-30~+85	-40~+100	Wave Soldering
			Yellow Green		2.1	2.6	565	570	575	750	1100	30	20	10	5	30	100	5	78	-30~+85	-40~+100	
	OSRBMC5B31A		Red	Water Clear	2.1	2.6	620	625	630	7000	8500	30	20	10	5	30	100	5	78	-30~+85	-40~+100	
			Blue		3.1	3.6	465	470	475	3000	4000	30	20	10	5	30	100	5	108	-30~+85	-40~+100	
	OSYGHC5B31A		Yellow	Water Clear	2.1	2.6	585	590	595	1120	1560	30	20	10	5	30	100	5	78	-30~+85	-40~+100	
			Yellow Green		2.1	2.6	565	570	575	750	1100	30	20	10	5	30	100	5	78	-30~+85	-40~+100	
	OSRGHC5B32A		Red	White Diffused	2.1	2.6	620	625	630	500	750	30	20	10	5	30	100	5	78	-30~+85	-40~+100	
			Yellow Green		2.1	2.6	565	570	575	330	550	30	20	10	5	30	100	5	78	-30~+85	-40~+100	
	OSRBMC5B32A		Red	White Diffused	2.1	2.6	620	625	630	3000	4200	30	20	10	5	30	100	5	78	-30~+85	-40~+100	
			Blue		3.1	3.6	465	470	475	1560	2000	30	20	10	5	30	100	5	108	-30~+85	-40~+100	
	OSYGHC5B32A		Yellow	White Diffused	2.1	2.6	585	590	595	500	750	30	20	10	5	30	100	5	78	-30~+85	-40~+100	
			Yellow Green		2.1	2.6	565	570	575	330	550	30	20	10	5	30	100	5	78	-30~+85	-40~+100	
	Φ5 Round Full Color Type																					
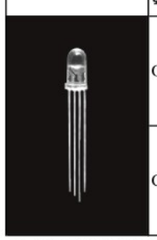	OSTAMC5B31A		Red	Water Clear	2.1	2.6	620	625	630	7000	8500	30	20	10	5	50	120	5	130	-30~+85	-40~+100	Wave Soldering
			Blue		3.1	3.6	465	470	475	3000	4000	30	20	10	5	30	100	5	108	-30~+85	-40~+100	
			Pure Green		3.1	3.6	520	525	530	12000	14400	30	20	10	5	30	100	5	108	-30~+85	-40~+100	
	OSTAMC5B32A		Red	White Diffused	2.1	2.6	620	625	630	3000	4200	30	20	10	5	50	120	5	130	-30~+85	-40~+100	
			Blue		3.1	3.6	465	470	475	1560	2000	30	20	10	5	30	100	5	108	-30~+85	-40~+100	
			Pure Green		3.1	3.6	520	525	530	5800	7000	30	20	10	5	30	100	5	108	-30~+85	-40~+100	

*1 Pulse Width≦ 10 ms, Duty Ratio≦ 1/10
*2 See Table For Part Number Formation
*3 Axial Direction (Luminous Intensity)
*4 Please Refer to CIE 1931 Chromaticity Digram
*5 Devices are Sorted By 5nm Wavelength Ranges

Lamp Type LED

Package	Part Number*2	Emitting Color	Lens Type	Forward Voltage VF(V)		Chromaticity coordinates*4				Luminous Intensity IV(mcd)*3		Directivity $2\theta_{1/2}$ (degree)	IF (mA)	Reverse CurrentI_R Max.(uA)	V_R (V)	Absolute Maximum Rating (Ta=25℃)						Mounting
						x		y														
				Typ.	Max.	Min.	Max.	Min.	Max.	Min.	Typ.					I_F (mA)	I_{FP}*1 (mA)	V_R (V)	P_D (mW)	T_{opr} (℃)	T_{stg} (℃)	
	5.0x4.1 Oval Low Decay Type																					
	OSW5DK5471D	● Pure White	Water Clear	3.1	3.6	0.23	0.31	0.24	0.32	25000	30000	70/40	20	10	5	30	100	5	108	-30~+85	-40~+100	Wave Soldering
	OSM5DK5471D	● Warm White	Water Clear	3.1	3.6	0.41	0.49	0.37	0.45	22000	25000	70/40	20	10	5	30	100	5	108	-30~+85	-40~+100	
	OSK5DK5471D	● Pink	Water Clear	3.1	3.6	0.41	0.49	0.13	0.21	3000	3600	70/40	20	10	5	30	100	5	108	-30~+85	-40~+100	
	5.1x4.3 Oval Low Decay Type																					
	OSW5DK5HA1D	● Pure White	Water Clear	3.1	3.6	0.23	0.31	0.24	0.32	36000	40000	100/40	20	10	5	30	100	5	108	-30~+85	-40~+100	Wave Soldering
	OSM5DK5HA1D	● Warm White	Water Clear	3.1	3.6	0.41	0.49	0.37	0.45	30000	36000	100/40	20	10	5	30	100	5	108	-30~+85	-40~+100	
	OSK5DK5HA1D	● Pink	Water Clear	3.1	3.6	0.41	0.49	0.13	0.21	4200	5500	100/40	20	10	5	30	100	5	108	-30~+85	-40~+100	

Package	Part Number*2	Emitting Color	Lens Type	Forward Voltage VF(V)		Dominant Wavelength Wd(nm)*5			Luminous Intensity IV(mcd)*3		Directivity $2\theta_{1/2}$ (degree)	IF (mA)	Reverse CurrentI_R Max.(uA)	V_R (V)	Absolute Maximum Rating (Ta=25℃)						Mounting
				Typ.	Max.	Min.	Typ.	Max.	Min.	Typ.					I_F (mA)	I_{FP}*1 (mA)	V_R (V)	P_D (mW)	T_{opr} (℃)	T_{stg} (℃)	
	5.0x4.1 Oval Lamp Type																				
	OSB5SA5471D	● Blue	Water Clear	3.1	3.6	465	470	475	2500	3500	70/40	20	10	5	30	100	5	108	-30~+85	-40~+100	Wave Soldering
	OSG5DA5471D	● Pure Green	Water Clear	3.1	3.6	520	525	530	12000	15000	70/40	20	10	5	30	100	5	108	-30~+85	-40~+100	
	OSV5HL5471D	● Violet	Water Clear	3.1	3.6	400	405	410	150	250	70/40	20	10	5	30	100	5	108	-30~+85	-40~+100	
	OSR5RU5471D	● Red	Water Clear	2.1	2.6	620	625	630	2180	3000	70/40	20	10	5	30	100	5	78	-30~+85	-40~+100	
	OSY5RU5471D	● Yellow	Water Clear	2.1	2.6	585	590	595	2180	3000	70/40	20	10	5	30	100	5	78	-30~+85	-40~+100	
	OSO5JA5471D	● Orange	Water Clear	2.1	2.6	600	605	610	2180	3000	70/40	20	10	5	30	100	5	78	-30~+85	-40~+100	
	OSR5PA5471D	● Red	Water Clear	2.1	2.6	620	625	630	4200	5500	70/40	20	10	5	50	120	5	130	-30~+85	-40~+100	
	OSY5PA5471D	● Yellow	Water Clear	2.1	2.6	585	590	595	4200	5500	70/40	20	10	5	50	120	5	130	-30~+85	-40~+100	
	OSO5GA5471D	● Orange	Water Clear	2.1	2.6	600	605	610	4200	5500	70/40	20	10	5	50	120	5	130	-30~+85	-40~+100	
	OSR5MA5471D	● Red	Water Clear	2.1	2.6	620	625	630	8000	9000	70/40	20	10	5	50	120	5	130	-30~+85	-40~+100	
	OSY5MA5471D	● Yellow	Water Clear	2.1	2.6	585	590	595	8000	9000	70/40	20	10	5	50	120	5	130	-30~+85	-40~+100	
	OSO5MA5471D	● Orange	Water Clear	2.1	2.6	600	605	610	8000	9000	70/40	20	10	5	50	120	5	130	-30~+85	-40~+100	
	5.1x4.3 Oval Lamp Type																				
	OSB5SA5HA1D	● Blue	Water Clear	3.1	3.6	465	470	475	4200	5000	100/40	20	10	5	30	100	5	108	-30~+85	-40~+100	Wave Soldering
	OSG5DA5HA1D	● Pure Green	Water Clear	3.1	3.6	520	525	530	18000	22000	100/40	20	10	5	30	100	5	108	-30~+85	-40~+100	
	OSV5HL5HA1D	● Violet	Water Clear	3.1	3.6	400	405	410	220	350	100/40	20	10	5	30	100	5	108	-30~+85	-40~+100	
	OSR5RU5HA1D	● Red	Water Clear	2.1	2.6	620	625	630	3000	4500	100/40	20	10	5	30	100	5	78	-30~+85	-40~+100	
	OSY5RU5HA1D	● Yellow	Water Clear	2.1	2.6	585	590	595	3000	4500	100/40	20	10	5	30	100	5	78	-30~+85	-40~+100	
	OSO5JA5HA1D	● Orange	Water Clear	2.1	2.6	600	605	610	3000	4500	100/40	20	10	5	30	100	5	78	-30~+85	-40~+100	
	OSR5PA5HA1D	● Red	Water Clear	2.1	2.6	620	625	630	7000	8000	100/40	20	10	5	50	120	5	130	-30~+85	-40~+100	
	OSY5PA5HA1D	● Yellow	Water Clear	2.1	2.6	585	590	595	7000	8000	100/40	20	10	5	50	120	5	130	-30~+85	-40~+100	
	OSO5GA5HA1D	● Orange	Water Clear	2.1	2.6	600	605	610	7000	8000	100/40	20	10	5	50	120	5	130	-30~+85	-40~+100	
	OSR5MA5HA1D	● Red	Water Clear	2.1	2.6	620	625	630	10000	13000	100/40	20	10	5	50	120	5	130	-30~+85	-40~+100	
	OSY5MA5HA1D	● Yellow	Water Clear	2.1	2.6	585	590	595	10000	13000	100/40	20	10	5	50	120	5	130	-30~+85	-40~+100	
	OSO5MA5HA1D	● Orange	Water Clear	2.1	2.6	600	605	610	10000	13000	100/40	20	10	5	50	120	5	130	-30~+85	-40~+100	

*1 Pulse Width≦10 ms, Duty Ratio≦1/10
*2 See Table For Part Number Formation
*3 Axial Direction (Luminous Intensity)
*4 Please Refer to CIE 1931 Chromaticity Digram
*5 Devices are Sorted By 5nm Wavelength Ranges

Lamp Type LED

Package	Part Number*2	Emitting Color		Lens Type	Forward Voltage VF (V)		Chromaticity coordinates*4 x		Chromaticity coordinates*4 y		Luminous Intensity IV(mcd)*3	
					Typ.	Max.	Min.	Max.	Min.	Max.	Min.	Typ.
	Φ1.8 Tower Low Decay Type											
	OSW5DK7331A		Pure White	Water Clear	3.1	3.6	0.23	0.31	0.24	0.32	4200	5800
	OSM5DK7331A		Warm White	Water Clear	3.1	3.6	0.41	0.49	0.37	0.45	2180	3000
	OSK5DK7331A		Pink	Water Clear	3.1	3.6	0.41	0.49	0.13	0.21	500	750
	Φ4 Round Low Decay Type											
	OSW5DK4131A		Pure White	Water Clear	3.1	3.6	0.23	0.31	0.24	0.32	20000	25000
	OSM5DK4131A		Warm White	Water Clear	3.1	3.6	0.41	0.49	0.37	0.45	12000	14000
	OSK5DK4131A		Pink	Water Clear	3.1	3.6	0.41	0.49	0.13	0.21	3000	3600

Package	Part Number*2	Emitting Color		Lens Type	Forward Voltage VF (V)		Dominant Wavelength Wd(nm)*5			Luminous Intensity IV(mcd)*3	
					Typ.	Max.	Min.	Typ.	Max.	Min.	Typ.
	Φ1.8 Tower Type										
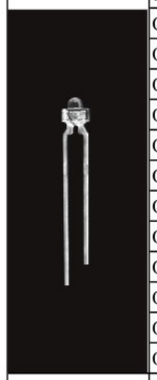	OSB5SA7331A		Blue	Water Clear	3.1	3.6	465	470	475	500	800
	OSG5DA7331A		Pure Green	Water Clear	3.1	3.6	520	525	530	2000	2500
	OSV5HL7331A		Violet	Water Clear	3.1	3.6	400	405	410	45	60
	OSR5RU7331A		Red	Water Clear	2.1	2.6	620	625	630	1120	1500
	OSY5RU7331A		Yellow	Water Clear	2.1	2.6	585	590	595	1120	1500
	OSO5JA7331A		Orange	Water Clear	2.1	2.6	600	605	610	1120	1500
	OSR5PA7331A		Red	Water Clear	2.1	2.6	620	625	630	2180	2800
	OSY5PA7331A		Yellow	Water Clear	2.1	2.6	585	590	595	2180	2800
	OSO5GA7331A		Orange	Water Clear	2.1	2.6	600	605	610	2180	2800
	OSR5MA7331A		Red	Water Clear	2.1	2.6	620	625	630	3000	4000
	OSY5MA7331A		Yellow	Water Clear	2.1	2.6	585	590	595	3000	4000
	OSO5MA7331A		Orange	Water Clear	2.1	2.6	600	605	610	3000	4000
	Φ4 Round Type										
	OSB5SA4131A		Blue	Water Clear	3.1	3.6	465	470	475	4200	6300
	OSG5DA4131A		Pure Green	Water Clear	3.1	3.6	520	525	530	10000	12000
	OSV5HL4131A		Violet	Water Clear	3.1	3.6	400	405	410	100	120
	OSR5RU4131A		Red	Water Clear	2.1	2.6	620	625	630	3000	3500
	OSY5RU4131A		Yellow	Water Clear	2.1	2.6	585	590	595	3000	3500
	OSO5JA4131A		Orange	Water Clear	2.1	2.6	600	605	610	3000	3500
	OSR5PA4131A		Red	Water Clear	2.1	2.6	620	625	630	5800	7000
	OSY5PA4131A		Yellow	Water Clear	2.1	2.6	585	590	595	5800	7000
	OSO5GA4131A		Orange	Water Clear	2.1	2.6	600	605	610	5800	7000
	OSR5MA4131A		Red	Water Clear	2.1	2.6	620	625	630	8400	10000
	OSY5MA4131A		Yellow	Water Clear	2.1	2.6	585	590	595	8400	10000
	OSO5MA4131A		Orange	Water Clear	2.1	2.6	600	605	610	8400	10000

*1 Pulse Width ≦ 10 ms, Duty Ratio ≦ 1/10
*2 See Table For Part Number Formation
*3 Axial Direction (Luminous Intensity)
*4 Please Refer to CIE 1931 Chromaticity Digram
*5 Devices are Sorted By 5nm Wavelength Ranges

Directivity 2θ1/2 (degree)	IF (mA)	Reverse Current I_R Max.(uA)	V_R (V)	Absolute Maximum Rating (Ta=25℃) I_F (mA)	I_{FP}*1 (mA)	V_R (V)	P_D (mW)	T_{opr} (℃)	T_{stg} (℃)	Mounting
30	20	10	5	30	100	5	108	-30~+85	-40~+100	Wave Soldering
30	20	10	5	30	100	5	108	-30~+85	-40~+100	
30	20	10	5	30	100	5	108	-30~+85	-40~+100	
30	20	10	5	30	100	5	108	-30~+85	-40~+100	Wave Soldering
30	20	10	5	30	100	5	108	-30~+85	-40~+100	
30	20	10	5	30	100	5	108	-30~+85	-40~+100	

Directivity 2θ1/2 (degree)	IF (mA)	Reverse Current I_R Max.(uA)	V_R (V)	Absolute Maximum Rating (Ta=25℃) I_F (mA)	I_{FP}*1 (mA)	V_R (V)	P_D (mW)	T_{opr} (℃)	T_{stg} (℃)	Mounting
30	20	10	5	30	100	5	108	-30~+85	-40~+100	Wave Soldering
30	20	10	5	30	100	5	108	-30~+85	-40~+100	
30	20	10	5	30	100	5	108	-30~+85	-40~+100	
30	20	10	5	30	100	5	78	-30~+85	-40~+100	
30	20	10	5	30	100	5	78	-30~+85	-40~+100	
30	20	10	5	30	100	5	78	-30~+85	-40~+100	
30	20	10	5	50	120	5	130	-30~+85	-40~+100	
30	20	10	5	50	120	5	130	-30~+85	-40~+100	
30	20	10	5	50	120	5	130	-30~+85	-40~+100	
30	20	10	5	50	120	5	130	-30~+85	-40~+100	
30	20	10	5	50	120	5	130	-30~+85	-40~+100	
30	20	10	5	50	120	5	130	-30~+85	-40~+100	
30	20	10	5	30	100	5	108	-30~+85	-40~+100	Wave Soldering
30	20	10	5	30	100	5	108	-30~+85	-40~+100	
30	20	10	5	30	100	5	108	-30~+85	-40~+100	
30	20	10	5	30	100	5	78	-30~+85	-40~+100	
30	20	10	5	30	100	5	78	-30~+85	-40~+100	
30	20	10	5	30	100	5	78	-30~+85	-40~+100	
30	20	10	5	50	120	5	130	-30~+85	-40~+100	
30	20	10	5	50	120	5	130	-30~+85	-40~+100	
30	20	10	5	50	120	5	130	-30~+85	-40~+100	
30	20	10	5	50	120	5	130	-30~+85	-40~+100	
30	20	10	5	50	120	5	130	-30~+85	-40~+100	
30	20	10	5	50	120	5	130	-30~+85	-40~+100	

Lamp Type LED

Package	Part Number*2	Emitting Color		Lens Type	Forward Voltage VF (V)		Chromaticity coordinates*4				Luminous Intensity IV(mcd)*3	
							x		y			
					Typ.	Max.	Min.	Max.	Min.	Max.	Min.	Typ.
	***Φ3 Round Low Decay Type***											
	OSW5DK3131A		Pure White	Water Clear	3.1	3.6	0.23	0.31	0.24	0.32	18000	20000
	OSM5DK3131A		Warm White	Water Clear	3.1	3.6	0.41	0.49	0.37	0.45	10000	12000
	OSK5DK3131A		Pink	Water Clear	3.1	3.6	0.41	0.49	0.13	0.29	1560	2300
	Φ5 Round Low Decay Type											
	OSW5DK5111A		Pure White	Water Clear	3.1	3.6	0.23	0.31	0.24	0.32	35000	40000
	OSM5DK5111A		Warm White	Water Clear	3.1	3.6	0.41	0.49	0.37	0.45	18000	22000
	OSK5DK5111A		Pink	Water Clear	3.1	3.6	0.41	0.49	0.13	0.21	5800	7000

Package	Part Number*2	Emitting Color		Lens Type	Forward Voltage VF (V)		Dominant Wavelength Wd(nm)*5			Luminous Intensity IV(mcd)*3	
					Typ.	Max.	Min.	Typ.	Max.	Min.	Typ.
	Φ3 Round Type										
	OSB5SA3131A		Blue	Water Clear	3.1	3.6	465	470	475	4200	5500
	OSG5DA3131A		Pure Green	Water Clear	3.1	3.6	520	525	530	8400	10000
	OSV5HL3131A		Violet	Water Clear	3.1	3.6	400	405	410	68	100
	OSR5RU3131A		Red	Water Clear	2.1	2.6	620	625	630	1560	2500
	OSY5RU3131A		Yellow	Water Clear	2.1	2.6	585	590	595	1560	2500
	OSO5JA3131A		Orange	Water Clear	2.1	2.6	600	605	610	1560	2500
	OSR5PA3131A		Red	Water Clear	2.1	2.6	620	625	630	4200	5000
	OSY5PA3131A		Yellow	Water Clear	2.1	2.6	585	590	595	4200	5000
	OSO5GA3131A		Orange	Water Clear	2.1	2.6	600	605	610	4200	5000
	OSR5MA3131A		Red	Water Clear	2.1	2.6	620	625	630	7000	8000
	OSY5MA3131A		Yellow	Water Clear	2.1	2.6	585	590	595	7000	8000
	OSO5MA3131A		Orange	Water Clear	2.1	2.6	600	605	610	7000	8000
	Φ5 Round Type										
	OSB5SA5111A		Blue	Water Clear	3.1	3.6	465	470	475	12000	14400
	OSG5DA5111A		Pure Green	Water Clear	3.1	3.6	520	525	530	25000	30000
	OSV5HL5111A		Violet	Water Clear	3.1	3.6	400	405	410	220	350
	OSR5RU5111A		Red	Water Clear	2.1	2.6	620	625	630	7000	9000
	OSY5RU5111A		Yellow	Water Clear	2.1	2.6	585	590	595	7000	9000
	OSO5JA5111A		Orange	Water Clear	2.1	2.6	600	605	610	7000	9000
	OSR5PA5111A		Red	Water Clear	2.1	2.6	620	625	630	14400	18000
	OSY5PA5111A		Yellow	Water Clear	2.1	2.6	585	590	595	14400	18000
	OSO5GA5111A		Orange	Water Clear	2.1	2.6	600	605	610	14400	18000
	OSR5MA5111A		Red	Water Clear	2.1	2.6	620	625	630	25000	30000
	OSY5MA5111A		Yellow	Water Clear	2.1	2.6	585	590	595	25000	30000
	OSO5MA5111A		Orange	Water Clear	2.1	2.6	600	605	610	25000	30000

*1 Pulse Width ≦ 10 ms, Duty Ratio ≦ 1/10
*2 See Table For Part Number Formation
*3 Axial Direction (Luminous Intensity)
*4 Please Refer to CIE 1931 Chromaticity Digram
*5 Devices are Sorted By 5nm Wavelength Ranges

Directivity 2θ1/2 (degree)	IF (mA)	Reverse Current I_R Max.(uA)	V_R (V)	Absolute Maximum Rating (Ta=25℃)						Mounting
				I_F (mA)	I_{FP}*1 (mA)	V_R (V)	P_D (mW)	T_{opr} (℃)	T_{stg} (℃)	
30	20	10	5	30	100	5	108	-30~+85	-40~+100	Wave Soldering
30	20	10	5	30	100	5	108	-30~+85	-40~+100	
30	20	10	5	30	100	5	108	-30~+85	-40~+100	
15	20	10	5	30	100	5	108	-30~+85	-40~+100	Wave Soldering
15	20	10	5	30	100	5	108	-30~+85	-40~+100	
15	20	10	5	30	100	5	108	-30~+85	-40~+100	

Directivity 2θ1/2 (degree)	IF (mA)	Reverse Current I_R Max.(uA)	V_R (V)	Absolute Maximum Rating (Ta=25℃)						Mounting
				I_F (mA)	I_{FP}*1 (mA)	V_R (V)	P_D (mW)	T_{opr} (℃)	T_{stg} (℃)	
30	20	10	5	30	100	5	108	-30~+85	-40~+100	Wave Soldering
30	20	10	5	30	100	5	108	-30~+85	-40~+100	
30	20	10	5	30	100	5	108	-30~+85	-40~+100	
30	20	10	5	30	100	5	78	-30~+85	-40~+100	
30	20	10	5	30	100	5	78	-30~+85	-40~+100	
30	20	10	5	30	100	5	78	-30~+85	-40~+100	
30	20	10	5	50	120	5	130	-30~+85	-40~+100	
30	20	10	5	50	120	5	130	-30~+85	-40~+100	
30	20	10	5	50	120	5	130	-30~+85	-40~+100	
30	20	10	5	50	120	5	130	-30~+85	-40~+100	
30	20	10	5	50	120	5	130	-30~+85	-40~+100	
30	20	10	5	50	120	5	130	-30~+85	-40~+100	
15	20	10	5	30	100	5	108	-30~+85	-40~+100	Wave Soldering
15	20	10	5	30	100	5	108	-30~+85	-40~+100	
15	20	10	5	30	100	5	108	-30~+85	-40~+100	
15	20	10	5	30	100	5	78	-30~+85	-40~+100	
15	20	10	5	30	100	5	78	-30~+85	-40~+100	
15	20	10	5	30	100	5	78	-30~+85	-40~+100	
15	20	10	5	50	120	5	130	-30~+85	-40~+100	
15	20	10	5	50	120	5	130	-30~+85	-40~+100	
15	20	10	5	50	120	5	130	-30~+85	-40~+100	
15	20	10	5	50	120	5	130	-30~+85	-40~+100	
15	20	10	5	50	120	5	130	-30~+85	-40~+100	
15	20	10	5	50	120	5	130	-30~+85	-40~+100	

Lamp Type LED

Package	Part Number*2	Emitting Color		Lens Type	Forward Voltage VF (V)		Chromaticity coordinates*4 x		Chromaticity coordinates*4 y		Luminous Intensity IV(mcd)*3		Directivity 2θ1/2 (degree)	IF (mA)	Reverse CurrentIR Max.(uA)	VR (V)	Absolute Maximum Rating (Ta=25℃) IF (mA)	IFP*1 (mA)	VR (V)	PD (mW)	Topr (℃)	Tstg (℃)	Mounting
					Typ.	Max.	Min.	Max.	Min.	Max.	Min.	Typ.											
	Φ8 Round Low Decay Type																						
	OSW5DK8131A		Pure White	Water Clear	3.1	3.6	0.23	0.31	0.24	0.32	30000	36000	30	20	10	5	30	100	5	108	-30~+85	-40~+100	Wave Soldering
	OSM5DK8131A		Warm White	Water Clear	3.1	3.6	0.41	0.49	0.37	0.45	14400	18000	30	20	10	5	30	100	5	108	-30~+85	-40~+100	
	OSK5DK8131A		Pink	Water Clear	3.1	3.6	0.41	0.49	0.13	0.21	3000	4200	30	20	10	5	30	100	5	108	-30~+85	-40~+100	
	Φ10 Round Low Decay Type																						
	OSW5DKA131A		Pure White	Water Clear	3.1	3.6	0.23	0.31	0.24	0.32	30000	37000	30	20	10	5	30	100	5	108	-30~+85	-40~+100	Wave Soldering
	OSM5DKA131A		Warm White	Water Clear	3.1	3.6	0.41	0.49	0.37	0.45	14400	19000	30	20	10	5	30	100	5	108	-30~+85	-40~+100	
	OSK5DKA131A		Pink	Water Clear	3.1	3.6	0.41	0.49	0.13	0.21	3000	4500	30	20	10	5	30	100	5	108	-30~+85	-40~+100	

Package	Part Number*2	Emitting Color		Lens Type	Forward Voltage VF (V)		Dominant Wavelength Wd(nm)*5			Luminous Intensity IV(mcd)*3		Directivity 2θ1/2 (degree)	IF (mA)	Reverse CurrentIR Max.(uA)	VR (V)	Absolute Maximum Rating (Ta=25℃) IF (mA)	IFP*1 (mA)	VR (V)	PD (mW)	Topr (℃)	Tstg (℃)	Mounting
					Typ.	Max.	Min.	Typ.	Max.	Min.	Typ.											
	Φ8 Round Type																					
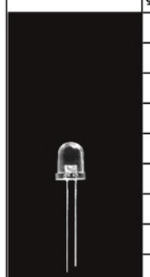	OSB5SA8131A		Blue	Water Clear	3.1	3.6	465	470	475	4200	5200	30	20	10	5	30	100	5	108	-30~+85	-40~+100	Wave Soldering
	OSG5DA8131A		Pure Green	Water Clear	3.1	3.6	520	525	530	18000	20000	30	20	10	5	30	100	5	108	-30~+85	-40~+100	
	OSV5HL8131A		Violet	Water Clear	3.1	3.6	400	405	410	150	200	30	20	10	5	30	100	5	108	-30~+85	-40~+100	
	OSR5RU8131A		Red	Water Clear	2.1	2.6	620	625	630	4000	6000	30	20	10	5	30	100	5	78	-30~+85	-40~+100	
	OSY5RU8131A		Yellow	Water Clear	2.1	2.6	585	590	595	4000	6000	30	20	10	5	30	100	5	78	-30~+85	-40~+100	
	OSO5JA8131A		Orange	Water Clear	2.1	2.6	600	605	610	4000	6000	30	20	10	5	30	100	5	78	-30~+85	-40~+100	
	OSR5PA8131A		Red	Water Clear	2.1	2.6	620	625	630	7000	9000	30	20	10	5	50	120	5	130	-30~+85	-40~+100	
	OSY5PA8131A		Yellow	Water Clear	2.1	2.6	585	590	595	7000	9000	30	20	10	5	50	120	5	130	-30~+85	-40~+100	
	OSO5GA8131A		Orange	Water Clear	2.1	2.6	600	605	610	7000	9000	30	20	10	5	50	120	5	130	-30~+85	-40~+100	
	OSR5MA8131A		Red	Water Clear	2.1	2.6	620	625	630	10000	13000	30	20	10	5	50	120	5	130	-30~+85	-40~+100	
	OSY5MA8131A		Yellow	Water Clear	2.1	2.6	585	590	595	10000	13000	30	20	10	5	50	120	5	130	-30~+85	-40~+100	
	OSO5MA8131A		Orange	Water Clear	2.1	2.6	600	605	610	10000	13000	30	20	10	5	50	120	5	130	-30~+85	-40~+100	
	Φ10 Round Type																					
	OSB5SAA131A		Blue	Water Clear	3.1	3.6	465	470	475	4200	5500	30	20	10	5	30	100	5	108	-30~+85	-40~+100	Wave Soldering
	OSG5DAA131A		Pure Green	Water Clear	3.1	3.6	520	525	530	18000	21000	30	20	10	5	30	100	5	108	-30~+85	-40~+100	
	OSV5HLA131A		Violet	Water Clear	3.1	3.6	400	405	410	150	220	30	20	10	5	30	100	5	108	-30~+85	-40~+100	
	OSR5RUA131A		Red	Water Clear	2.1	2.6	620	625	630	4200	6000	30	20	10	5	30	100	5	78	-30~+85	-40~+100	
	OSY5RUA131A		Yellow	Water Clear	2.1	2.6	585	590	595	4200	6000	30	20	10	5	30	100	5	78	-30~+85	-40~+100	
	OSO5JAA131A		Orange	Water Clear	2.1	2.6	600	605	610	4200	6000	30	20	10	5	30	100	5	78	-30~+85	-40~+100	
	OSR5PAA131A		Red	Water Clear	2.1	2.6	620	625	630	10000	12000	30	20	10	5	50	120	5	130	-30~+85	-40~+100	
	OSY5PAA131A		Yellow	Water Clear	2.1	2.6	585	590	595	10000	12000	30	20	10	5	50	120	5	130	-30~+85	-40~+100	
	OSO5GAA131A		Orange	Water Clear	2.1	2.6	600	605	610	10000	12000	30	20	10	5	50	120	5	130	-30~+85	-40~+100	
	OSR5MAA131A		Red	Water Clear	2.1	2.6	620	625	630	14400	17000	30	20	10	5	50	120	5	130	-30~+85	-40~+100	
	OSY5MAA131A		Yellow	Water Clear	2.1	2.6	585	590	595	14400	17000	30	20	10	5	50	120	5	130	-30~+85	-40~+100	
	OSO5MAA131A		Orange	Water Clear	2.1	2.6	600	605	610	14400	17000	30	20	10	5	50	120	5	130	-30~+85	-40~+100	

*1 Pulse Width≦10 ms, Duty Ratio≦1/10
*2 See Table For Part Number Formation
*3 Axial Direction (Luminous Intensity)
*4 Please Refer to CIE 1931 Chromaticity Digram
*5 Devices are Sorted By 5nm Wavelength Ranges

General Lighting LED

Lamp Type LED

Package	Part Number*2	Emitting Color		Lens Type	Forward Voltage VF (V)		Chromaticity coordinates*4 x		Chromaticity coordinates*4 y		Luminous Intensity IV (mcd)*3		Directivity 2θ1/2 (degree)	IF (mA)	Reverse Current I_R Max.(uA)	V_R (V)	Absolute Maximum Rating (Ta=25℃) I_F (mA)	I_{FP}*1 (mA)	V_R (V)	P_D (mW)	T_{opr} (℃)	T_{stg} (℃)	Mounting
					Typ.	Max.	Min.	Max.	Min.	Max.	Min.	Typ.											
	Φ5 Bullet Low Decay Type																						
	OSW5DK5201A		Pure White	Water Clear	3.1	3.6	0.23	0.31	0.24	0.32	72000	80000	8	20	10	5	30	100	5	108	-30~+85	-40~+100	Wave Soldering
	OSM5DK5201A		Warm White	Water Clear	3.1	3.6	0.41	0.49	0.37	0.45	43000	50000	8	20	10	5	30	100	5	108	-30~+85	-40~+100	
	OSK5DK5201A		Pink	Water Clear	3.1	3.6	0.41	0.49	0.13	0.21	8400	10000	8	20	10	5	30	100	5	108	-30~+85	-40~+100	
	Φ10 Bullet Low Decay Type																						
	OSW5DKA201A		Pure White	Water Clear	3.1	3.6	0.23	0.31	0.24	0.32	85000	100000	8	20	10	5	30	100	5	108	-30~+85	-40~+100	Wave Soldering
	OSM5DKA201A		Warm White	Water Clear	3.1	3.6	0.41	0.49	0.37	0.45	43000	52000	8	20	10	5	30	100	5	108	-30~+85	-40~+100	
	OSK5DKA201A		Pink	Water Clear	3.1	3.6	0.41	0.49	0.13	0.21	10000	12000	8	20	10	5	30	100	5	108	-30~+85	-40~+100	

Package	Part Number*2	Emitting Color		Lens Type	Forward Voltage VF (V)		Dominant Wavelength Wd(nm)*5			Luminous Intensity IV (mcd)*3		Directivity 2θ1/2 (degree)	IF (mA)	Reverse Current I_R Max.(uA)	V_R (V)	Absolute Maximum Rating (Ta=25℃) I_F (mA)	I_{FP}*1 (mA)	V_R (V)	P_D (mW)	T_{opr} (℃)	T_{stg} (℃)	Mounting
					Typ.	Max.	Min.	Typ.	Max.	Min.	Typ.											
	Φ5 Bullet Type																					
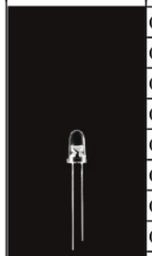	OSB5SA5201A		Blue	Water Clear	3.1	3.6	465	470	475	14400	16000	8	20	10	5	30	100	5	108	-30~+85	-40~+100	Wave Soldering
	OSG5DA5201A		Pure Green	Water Clear	3.1	3.6	520	525	530	30000	35000	8	20	10	5	30	100	5	108	-30~+85	-40~+100	
	OSV5HL5201A		Violet	Water Clear	3.1	3.6	400	405	410	220	300	8	20	10	5	30	100	5	108	-30~+85	-40~+100	
	OSR5RU5201A		Red	Water Clear	2.1	2.6	620	625	630	12000	15000	8	20	10	5	30	100	5	78	-30~+85	-40~+100	
	OSY5RU5201A		Yellow	Water Clear	2.1	2.6	585	590	595	12000	15000	8	20	10	5	30	100	5	78	-30~+85	-40~+100	
	OSO5JA5201A		Orange	Water Clear	2.1	2.6	600	605	610	12000	15000	8	20	10	5	30	100	5	78	-30~+85	-40~+100	
	OSR5PA5201A		Red	Water Clear	2.1	2.6	620	625	630	36000	40000	8	20	10	5	50	120	5	130	-30~+85	-40~+100	
	OSY5PA5201A		Yellow	Water Clear	2.1	2.6	585	590	595	36000	40000	8	20	10	5	50	120	5	130	-30~+85	-40~+100	
	OSO5GA5201A		Orange	Water Clear	2.1	2.6	600	605	610	36000	40000	8	20	10	5	50	120	5	130	-30~+85	-40~+100	
	OSR5MA5201A		Red	Water Clear	2.1	2.6	620	625	630	50000	60000	8	20	10	5	50	120	5	130	-30~+85	-40~+100	
	OSY5MA5201A		Yellow	Water Clear	2.1	2.6	585	590	595	50000	60000	8	20	10	5	50	120	5	130	-30~+85	-40~+100	
	OSO5MA5201A		Orange	Water Clear	2.1	2.6	600	605	610	50000	60000	8	20	10	5	50	120	5	130	-30~+85	-40~+100	
	Φ10 Bullet Type																					
	OSB5SAA201A		Blue	Water Clear	3.1	3.6	465	470	475	14400	18000	8	20	10	5	30	100	5	108	-30~+85	-40~+100	Wave Soldering
	OSG5DAA201A		Pure Green	Water Clear	3.1	3.6	520	525	530	36000	40000	8	20	10	5	30	100	5	108	-30~+85	-40~+100	
	OSV5HLA201A		Violet	Water Clear	3.1	3.6	400	405	410	330	500	8	20	10	5	30	100	5	108	-30~+85	-40~+100	
	OSR5RUA201A		Red	Water Clear	2.1	2.6	620	625	630	30000	35000	8	20	10	5	30	100	5	78	-30~+85	-40~+100	
	OSY5RUA201A		Yellow	Water Clear	2.1	2.6	585	590	595	30000	35000	8	20	10	5	30	100	5	78	-30~+85	-40~+100	
	OSO5JAA201A		Orange	Water Clear	2.1	2.6	600	605	610	30000	35000	8	20	10	5	30	100	5	78	-30~+85	-40~+100	
	OSR5PAA201A		Red	Water Clear	2.1	2.6	620	625	630	50000	60000	8	20	10	5	50	120	5	130	-30~+85	-40~+100	
	OSY5PAA201A		Yellow	Water Clear	2.1	2.6	585	590	595	50000	60000	8	20	10	5	50	120	5	130	-30~+85	-40~+100	
	OSO5GAA201A		Orange	Water Clear	2.1	2.6	600	605	610	50000	60000	8	20	10	5	50	120	5	130	-30~+85	-40~+100	
	OSR5MAA201A		Red	Water Clear	2.1	2.6	620	625	630	72000	80000	8	20	10	5	50	120	5	130	-30~+85	-40~+100	
	OSY5MAA201A		Yellow	Water Clear	2.1	2.6	585	590	595	72000	80000	8	20	10	5	50	120	5	130	-30~+85	-40~+100	
	OSO5MAA201A		Orange	Water Clear	2.1	2.6	600	605	610	72000	80000	8	20	10	5	50	120	5	130	-30~+85	-40~+100	

*1 Pulse Width≦10 ms, Duty Ratio≦1/10
*2 See Table For Part Number Formation
*3 Axial Direction (Luminous Intensity)
*4 Please Refer to CIE 1931 Chromaticity Digram
*5 Devices are Sorted By 5nm Wavelength Ranges

General Lighting LED

Lamp Type LED

Package	Part Number*2	Emitting Color		Lens Type	Forward Voltage VF (V)		Chromaticity coordinates*4 x		Chromaticity coordinates*4 y		Luminous Intensity IV(mcd)*3		Directivity 2θ1/2 (degree)	IF (mA)	Reverse CurrentIR Max.(uA)	VR (V)	Absolute Maximum Rating (Ta=25℃) IF (mA)	IFP*1 (mA)	VR (V)	PD (mW)	Topr (℃)	Tstg (℃)	Mounting
					Typ.	Max.	Min.	Max.	Min.	Max.	Min.	Typ.											
	Φ4.8 Straw Low Decay Type																						
	OSW5DK56A1A		Pure White	Water Clear	3.1	3.6	0.23	0.31	0.24	0.32	2180	3000	100	20	10	5	30	100	5	108	-30~+85	-40~+100	Wave Soldering
	OSM5DK56A1A		Warm White	Water Clear	3.1	3.6	0.41	0.49	0.37	0.45	1560	2000	100	20	10	5	30	100	5	108	-30~+85	-40~+100	
	OSK5DK56A1A		Pink	Water Clear	3.1	3.6	0.41	0.49	0.13	0.21	500	700	100	20	10	5	30	100	5	108	-30~+85	-40~+100	
	Φ8 Straw Low Decay Type																						
	OSW5DK87A1A		Pure White	Water Clear	3.1	3.6	0.23	0.31	0.24	0.32	3000	4000	100	20	10	5	30	100	5	108	-30~+85	-40~+100	Wave Soldering
	OSM5DK87A1A		Warm White	Water Clear	3.1	3.6	0.41	0.49	0.37	0.45	2180	3000	100	20	10	5	30	100	5	108	-30~+85	-40~+100	
	OSK5DK87A1A		Pink	Water Clear	3.1	3.6	0.41	0.49	0.13	0.21	500	750	100	20	10	5	30	100	5	108	-30~+85	-40~+100	

Package	Part Number*2	Emitting Color		Lens Type	Forward Voltage VF (V)		Dominant Wavelength Wd(nm)*5			Luminous Intensity IV(mcd)*3		Directivity 2θ1/2 (degree)	IF (mA)	Reverse CurrentIR Max.(uA)	VR (V)	Absolute Maximum Rating (Ta=25℃) IF (mA)	IFP*1 (mA)	VR (V)	PD (mW)	Topr (℃)	Tstg (℃)	Mounting
					Typ.	Max.	Min.	Typ.	Max.	Min.	Typ.											
	Φ4.8 Straw Type																					
	OSB5SA56A1A		Blue	Water Clear	3.1	3.6	465	470	475	750	900	100	20	10	5	30	100	5	108	-30~+85	-40~+100	Wave Soldering
	OSG5DA56A1A		Pure Green	Water Clear	3.1	3.6	520	525	530	2000	2500	100	20	10	5	30	100	5	108	-30~+85	-40~+100	
	OSV5HL56A1A		Violet	Water Clear	3.1	3.6	400	405	410	30	45	100	20	10	5	30	100	5	108	-30~+85	-40~+100	
	OSR5RU56A1A		Red	Water Clear	2.1	2.6	620	625	630	330	600	100	20	10	5	30	100	5	78	-30~+85	-40~+100	
	OSY5RU56A1A		Yellow	Water Clear	2.1	2.6	585	590	595	330	600	100	20	10	5	30	100	5	78	-30~+85	-40~+100	
	OSO5JA56A1A		Orange	Water Clear	2.1	2.6	600	605	610	330	600	100	20	10	5	30	100	5	78	-30~+85	-40~+100	
	OSR5PA56A1A		Red	Water Clear	2.1	2.6	620	625	630	1120	1500	100	20	10	5	50	120	5	130	-30~+85	-40~+100	
	OSY5PA56A1A		Yellow	Water Clear	2.1	2.6	585	590	595	1120	1500	100	20	10	5	50	120	5	130	-30~+85	-40~+100	
	OSO5GA56A1A		Orange	Water Clear	2.1	2.6	600	605	610	1120	1500	100	20	10	5	50	120	5	130	-30~+85	-40~+100	
	OSR5MA56A1A		Red	Water Clear	2.1	2.6	620	625	630	1560	2000	100	20	10	5	50	120	5	130	-30~+85	-40~+100	
	OSY5MA56A1A		Yellow	Water Clear	2.1	2.6	585	590	595	1560	2000	100	20	10	5	50	120	5	130	-30~+85	-40~+100	
	OSO5MA56A1A		Orange	Water Clear	2.1	2.6	600	605	610	1560	2000	100	20	10	5	50	120	5	130	-30~+85	-40~+100	
	Φ8 Straw Type																					
	OSB5SA87A1A		Blue	Water Clear	3.1	3.6	465	470	475	1000	1500	100	20	10	5	30	100	5	108	-30~+85	-40~+100	Wave Soldering
	OSG5DA87A1A		Pure Green	Water Clear	3.1	3.6	520	525	530	2180	3000	100	20	10	5	30	100	5	108	-30~+85	-40~+100	
	OSV5HL87A1A		Violet	Water Clear	3.1	3.6	400	405	410	45	68	100	20	10	5	30	100	5	108	-30~+85	-40~+100	
	OSR5RU87A1A		Red	Water Clear	2.1	2.6	620	625	630	500	750	100	20	10	5	30	100	5	78	-30~+85	-40~+100	
	OSY5RU87A1A		Yellow	Water Clear	2.1	2.6	585	590	595	500	750	100	20	10	5	30	100	5	78	-30~+85	-40~+100	
	OSO5JA87A1A		Orange	Water Clear	2.1	2.6	600	605	610	500	750	100	20	10	5	30	100	5	78	-30~+85	-40~+100	
	OSR5PA87A1A		Red	Water Clear	2.1	2.6	620	625	630	1560	2180	100	20	10	5	50	120	5	130	-30~+85	-40~+100	
	OSY5PA87A1A		Yellow	Water Clear	2.1	2.6	585	590	595	1560	2180	100	20	10	5	50	120	5	130	-30~+85	-40~+100	
	OSO5GA87A1A		Orange	Water Clear	2.1	2.6	600	605	610	1560	2180	100	20	10	5	50	120	5	130	-30~+85	-40~+100	
	OSR5MA87A1A		Red	Water Clear	2.1	2.6	620	625	630	2180	3000	100	20	10	5	50	120	5	130	-30~+85	-40~+100	
	OSY5MA87A1A		Yellow	Water Clear	2.1	2.6	585	590	595	2180	3000	100	20	10	5	50	120	5	130	-30~+85	-40~+100	
	OSO5MA87A1A		Orange	Water Clear	2.1	2.6	600	605	610	2180	3000	100	20	10	5	50	120	5	130	-30~+85	-40~+100	

*1 Pulse Width≦10 ms, Duty Ratio≦1/10
*2 See Table For Part Number Formation
*3 Axial Direction (Luminous Intensity)
*4 Please Refer to CIE 1931 Chromaticity Digram
*5 Devices are Sorted By 5nm Wavelength Ranges

Lamp Type LED

Package	Part Number*2	Emitting Color		Lens Type	Forward Voltage VF (V)		Chromaticity coordinates*4 x		Chromaticity coordinates*4 y		Luminous Intensity IV(mcd)*3		Directivity 2θ1/2 (degree)	IF (mA)	Reverse CurrentIR Max.(uA)	VR (V)	Absolute Maximum Rating (Ta=25℃) IF (mA)	IFP*1 (mA)	VR (V)	PD (mW)	Topr (℃)	Tstg (℃)	Mounting
					Typ.	Max.	Min.	Max.	Min.	Max.	Min.	Typ.											
	Φ5 Flat Low Decay Type																						
	OSW5DK57E1A		Pure White	Water Clear	3.1	3.6	0.23	0.31	0.24	0.32	2180	3000	140	20	10	5	30	100	5	108	-30~+85	-40~+100	Wave Soldering
	OSM5DK57E1A		Warm White	Water Clear	3.1	3.6	0.41	0.49	0.37	0.45	1120	1560	140	20	10	5	30	100	5	108	-30~+85	-40~+100	
	OSK5DK57E1A		Pink	Water Clear	3.1	3.6	0.41	0.49	0.13	0.21	330	400	140	20	10	5	30	100	5	108	-30~+85	-40~+100	
	Φ8 Flat Low Decay Type																						
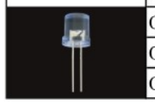	OSW5DK82E1A		Pure White	Water Clear	3.1	3.6	0.23	0.31	0.24	0.32	3000	4200	140	20	10	5	30	100	5	108	-30~+85	-40~+100	Wave Soldering
	OSM5DK82E1A		Warm White	Water Clear	3.1	3.6	0.41	0.49	0.37	0.45	1560	2180	140	20	10	5	30	100	5	108	-30~+85	-40~+100	
	OSK5DK82E1A		Pink	Water Clear	3.1	3.6	0.41	0.49	0.13	0.21	500	750	140	20	10	5	30	100	5	108	-30~+85	-40~+100	

Package	Part Number*2	Emitting Color		Lens Type	Forward Voltage VF (V)		Dominant Wavelength Wd(nm)*5			Luminous Intensity IV(mcd)*3		Directivity 2θ1/2 (degree)	IF (mA)	Reverse CurrentIR Max.(uA)	VR (V)	Absolute Maximum Rating (Ta=25℃) IF (mA)	IFP*1 (mA)	VR (V)	PD (mW)	Topr (℃)	Tstg (℃)	Mounting
					Typ.	Max.	Min.	Typ.	Max.	Min.	Typ.											
	Φ5 Flat Type																					
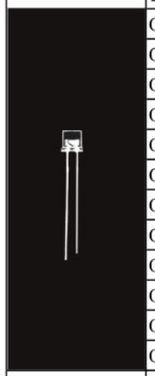	OSB5SA57E1A		Blue	Water Clear	3.1	3.6	465	470	475	220	330	140	20	10	5	30	100	5	108	-30~+85	-40~+100	Wave Soldering
	OSG5DA57E1A		Pure Green	Water Clear	3.1	3.6	520	525	530	1560	2000	140	20	10	5	30	100	5	108	-30~+85	-40~+100	
	OSV5HL57E1A		Violet	Water Clear	3.1	3.6	400	405	410	20	35	140	20	10	5	30	100	5	108	-30~+85	-40~+100	
	OSR5RU57E1A		Red	Water Clear	2.1	2.6	620	625	630	330	450	140	20	10	5	30	100	5	78	-30~+85	-40~+100	
	OSY5RU57E1A		Yellow	Water Clear	2.1	2.6	585	590	595	330	450	140	20	10	5	30	100	5	78	-30~+85	-40~+100	
	OSO5JA57E1A		Orange	Water Clear	2.1	2.6	600	605	610	330	450	140	20	10	5	30	100	5	78	-30~+85	-40~+100	
	OSR5PA57E1A		Red	Water Clear	2.1	2.6	620	625	630	750	1000	140	20	10	5	50	120	5	130	-30~+85	-40~+100	
	OSY5PA57E1A		Yellow	Water Clear	2.1	2.6	585	590	595	750	1000	140	20	10	5	50	120	5	130	-30~+85	-40~+100	
	OSO5GA57E1A		Orange	Water Clear	2.1	2.6	600	605	610	750	1000	140	20	10	5	50	120	5	130	-30~+85	-40~+100	
	OSR5MA57E1A		Red	Water Clear	2.1	2.6	620	625	630	1120	1560	140	20	10	5	50	120	5	130	-30~+85	-40~+100	
	OSY5MA57E1A		Yellow	Water Clear	2.1	2.6	585	590	595	1120	1560	140	20	10	5	50	120	5	130	-30~+85	-40~+100	
	OSO5MA57E1A		Orange	Water Clear	2.1	2.6	600	605	610	1120	1560	140	20	10	5	50	120	5	130	-30~+85	-40~+100	
	Φ8 Flat Type																					
	OSB5SA82E1A		Blue	Water Clear	3.1	3.6	465	470	475	330	500	140	20	10	5	30	100	5	108	-30~+85	-40~+100	Wave Soldering
	OSG5DA82E1A		Pure Green	Water Clear	3.1	3.6	520	525	530	2180	3000	140	20	10	5	30	100	5	108	-30~+85	-40~+100	
	OSV5HL82E1A		Violet	Water Clear	3.1	3.6	400	405	410	30	45	140	20	10	5	30	100	5	108	-30~+85	-40~+100	
	OSR5RU82E1A		Red	Water Clear	2.1	2.6	620	625	630	500	700	140	20	10	5	30	100	5	78	-30~+85	-40~+100	
	OSY5RU82E1A		Yellow	Water Clear	2.1	2.6	585	590	595	500	700	140	20	10	5	30	100	5	78	-30~+85	-40~+100	
	OSO5JA82E1A		Orange	Water Clear	2.1	2.6	600	605	610	500	700	140	20	10	5	30	100	5	78	-30~+85	-40~+100	
	OSR5PA82E1A		Red	Water Clear	2.1	2.6	620	625	630	1120	1500	140	20	10	5	50	120	5	130	-30~+85	-40~+100	
	OSY5PA82E1A		Yellow	Water Clear	2.1	2.6	585	590	595	1120	1500	140	20	10	5	50	120	5	130	-30~+85	-40~+100	
	OSO5GA82E1A		Orange	Water Clear	2.1	2.6	600	605	610	1120	1500	140	20	10	5	50	120	5	130	-30~+85	-40~+100	
	OSR5MA82E1A		Red	Water Clear	2.1	2.6	620	625	630	1560	2180	140	20	10	5	50	120	5	130	-30~+85	-40~+100	
	OSY5MA82E1A		Yellow	Water Clear	2.1	2.6	585	590	595	1560	2180	140	20	10	5	50	120	5	130	-30~+85	-40~+100	
	OSO5MA82E1A		Orange	Water Clear	2.1	2.6	600	605	610	1560	2180	140	20	10	5	50	120	5	130	-30~+85	-40~+100	

*1 Pulse Width≦10 ms, Duty Ratio≦1/10
*2 See Table For Part Number Formation
*3 Axial Direction (Luminous Intensity)
*4 Please Refer to CIE 1931 Chromaticity Digram
*5 Devices are Sorted By 5nm Wavelength Ranges

General Lighting LED

Lamp Type LED

Package	Part Number*2	Emitting Color		Lens Type	Forward Voltage VF (V)		Chromaticity coordinates*4 x		Chromaticity coordinates*4 y		Luminous Intensity IV(mcd)*3		Directivity 2θ1/2 (degree)	IF (mA)	Reverse CurrentIR Max.(uA)	VR (V)	Absolute Maximum Rating (Ta=25℃) IF (mA)	IFP*1 (mA)	VR (V)	PD (mW)	Topr (℃)	Tstg (℃)	Mounting
					Typ.	Max.	Min.	Max.	Min.	Max.	Min.	Typ.											
	Φ5 Concave Low Decay Type																						
	OSW5DK5MC1B		Pure White	Water Clear	3.1	3.6	0.23	0.31	0.24	0.32	150	240	120	20	10	5	30	100	5	108	-30~+85	-40~+100	Wave Soldering
	OSM5DK5MC1B		Warm White	Water Clear	3.1	3.6	0.41	0.49	0.37	0.45	100	140	120	20	10	5	30	100	5	108	-30~+85	-40~+100	
	OSK5DK5MC1B		Pink	Water Clear	3.1	3.6	0.41	0.49	0.13	0.21	45	68	120	20	10	5	30	100	5	108	-30~+85	-40~+100	
	Φ10 Concave Low Decay Type																						
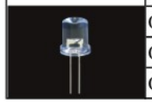	OSW5DK83C1A		Pure White	Water Clear	3.1	3.6	0.23	0.31	0.24	0.32	220	330	120	20	10	5	30	100	5	108	-30~+85	-40~+100	Wave Soldering
	OSM5DK83C1A		Warm White	Water Clear	3.1	3.6	0.41	0.49	0.37	0.45	150	220	120	20	10	5	30	100	5	108	-30~+85	-40~+100	
	OSK5DK83C1A		Pink	Water Clear	3.1	3.6	0.41	0.49	0.13	0.21	68	100	120	20	10	5	30	100	5	108	-30~+85	-40~+100	

Package	Part Number*2	Emitting Color		Lens Type	Forward Voltage VF (V)		Dominant Wavelength Wd(nm)*5			Luminous Intensity IV(mcd)*3		Directivity 2θ1/2 (degree)	IF (mA)	Reverse CurrentIR Max.(uA)	VR (V)	Absolute Maximum Rating (Ta=25℃) IF (mA)	IFP*1 (mA)	VR (V)	PD (mW)	Topr (℃)	Tstg (℃)	Mounting
					Typ.	Max.	Min.	Typ.	Max.	Min.	Typ.											
	Φ5 Concave Type																					
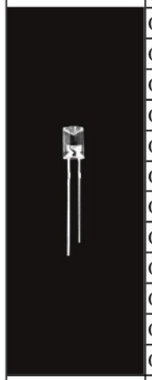	OSB5SA5MC1B		Blue	Water Clear	3.1	3.6	465	470	475	68	100	120	20	10	5	30	100	5	108	-30~+85	-40~+100	Wave Soldering
	OSG5DA5MC1B		Pure Green	Water Clear	3.1	3.6	520	525	530	100	150	120	20	10	5	30	100	5	108	-30~+85	-40~+100	
	OSV5HL5MC1B		Violet	Water Clear	3.1	3.6	400	405	410	1	5	120	20	10	5	30	100	5	108	-30~+85	-40~+100	
	OSR5RU5MC1B		Red	Water Clear	2.1	2.6	620	625	630	68	100	120	20	10	5	30	100	5	78	-30~+85	-40~+100	
	OSY5RU5MC1B		Yellow	Water Clear	2.1	2.6	585	590	595	68	100	120	20	10	5	30	100	5	78	-30~+85	-40~+100	
	OSO5JA5MC1B		Orange	Water Clear	2.1	2.6	600	605	610	68	100	120	20	10	5	30	100	5	78	-30~+85	-40~+100	
	OSR5PA5MC1B		Red	Water Clear	2.1	2.6	620	625	630	150	180	120	20	10	5	50	120	5	130	-30~+85	-40~+100	
	OSY5PA5MC1B		Yellow	Water Clear	2.1	2.6	585	590	595	150	180	120	20	10	5	50	120	5	130	-30~+85	-40~+100	
	OSO5GA5MC1B		Orange	Water Clear	2.1	2.6	600	605	610	150	180	120	20	10	5	50	120	5	130	-30~+85	-40~+100	
	OSR5MA5MC1B		Red	Water Clear	2.1	2.6	620	625	630	150	250	120	20	10	5	50	120	5	130	-30~+85	-40~+100	
	OSY5MA5MC1B		Yellow	Water Clear	2.1	2.6	585	590	595	150	250	120	20	10	5	50	120	5	130	-30~+85	-40~+100	
	OSO5MA5MC1B		Orange	Water Clear	2.1	2.6	600	605	610	150	250	120	20	10	5	50	120	5	130	-30~+85	-40~+100	
	Φ10 Concave Type																					
	OSB5SA83C1A		Blue	Water Clear	3.1	3.6	465	470	475	100	150	120	20	10	5	30	100	5	108	-30~+85	-40~+100	Wave Soldering
	OSG5DA83C1A		Pure Green	Water Clear	3.1	3.6	520	525	530	150	220	120	20	10	5	30	100	5	108	-30~+85	-40~+100	
	OSV5HL83C1A		Violet	Water Clear	3.1	3.6	400	405	410	5	10	120	20	10	5	30	100	5	108	-30~+85	-40~+100	
	OSR5RU83C1A		Red	Water Clear	2.1	2.6	620	625	630	100	150	120	20	10	5	30	100	5	78	-30~+85	-40~+100	
	OSY5RU83C1A		Yellow	Water Clear	2.1	2.6	585	590	595	100	150	120	20	10	5	30	100	5	78	-30~+85	-40~+100	
	OSO5JA83C1A		Orange	Water Clear	2.1	2.6	600	605	610	100	150	120	20	10	5	30	100	5	78	-30~+85	-40~+100	
	OSR5PA83C1A		Red	Water Clear	2.1	2.6	620	625	630	220	300	120	20	10	5	50	120	5	130	-30~+85	-40~+100	
	OSY5PA83C1A		Yellow	Water Clear	2.1	2.6	585	590	595	220	300	120	20	10	5	50	120	5	130	-30~+85	-40~+100	
	OSO5GA83C1A		Orange	Water Clear	2.1	2.6	600	605	610	220	300	120	20	10	5	50	120	5	130	-30~+85	-40~+100	
	OSR5MA83C1A		Red	Water Clear	2.1	2.6	620	625	630	250	500	120	20	10	5	50	120	5	130	-30~+85	-40~+100	
	OSY5MA83C1A		Yellow	Water Clear	2.1	2.6	585	590	595	250	500	120	20	10	5	50	120	5	130	-30~+85	-40~+100	
	OSO5MA83C1A		Orange	Water Clear	2.1	2.6	600	605	610	250	500	120	20	10	5	50	120	5	130	-30~+85	-40~+100	

*1 Pulse Width ≦ 10 ms, Duty Ratio ≦ 1/10
*2 See Table For Part Number Formation
*3 Axial Direction (Luminous Intensity)
*4 Please Refer to CIE 1931 Chromaticity Digram
*5 Devices are Sorted By 5nm Wavelength Ranges

Lamp Type LED

Package	Part Number*2	Emitting Color		Lens Type	Forward Voltage VF (V)		Chromaticity coordinates*4 x		Chromaticity coordinates*4 y		Luminous Intensity IV(mcd)*3		Directivity 2θ1/2 (degree)	IF (mA)	Reverse Current I_R Max.(uA)	V_R (V)	Absolute Maximum Rating (Ta=25℃) I_F (mA)	I_{FP}*1 (mA)	V_R (V)	P_D (mW)	T_{opr} (℃)	T_{stg} (℃)	Mounting
					Typ.	Max.	Min.	Max.	Min.	Max.	Min.	Typ.											
	2x3x4 Rectangular Low Decay Type																						
	OSW5DK7BA1B		Pure White	Water Clear	3.1	3.6	0.23	0.31	0.24	0.32	750	1000	100	20	10	5	30	100	5	108	-30~+85	-40~+100	Wave Soldering
	OSM5DK7BA1B		Warm White	Water Clear	3.1	3.6	0.41	0.49	0.37	0.45	330	500	100	20	10	5	30	100	5	108	-30~+85	-40~+100	
	OSK5DK7BA1B		Pink	Water Clear	3.1	3.6	0.41	0.49	0.13	0.21	68	110	100	20	10	5	30	100	5	108	-30~+85	-40~+100	
	2x5x7 Rectangular Low Decay Type																						
	OSW5DK71A1B		Pure White	Water Clear	3.1	3.6	0.23	0.31	0.24	0.32	1560	2500	100	20	10	5	30	100	5	108	-30~+85	-40~+100	Wave Soldering
	OSM5DK71A1B		Warm White	Water Clear	3.1	3.6	0.41	0.49	0.37	0.45	1000	1300	100	20	10	5	30	100	5	108	-30~+85	-40~+100	
	OSK5DK71A1B		Pink	Water Clear	3.1	3.6	0.41	0.49	0.13	0.21	220	300	100	20	10	5	30	100	5	108	-30~+85	-40~+100	

Package	Part Number*2	Emitting Color		Lens Type	Forward Voltage VF (V)		Dominant Wavelength Wd(nm)*5			Luminous Intensity IV(mcd)*3		Directivity 2θ1/2 (degree)	IF (mA)	Reverse Current I_R Max.(uA)	V_R (V)	Absolute Maximum Rating (Ta=25℃) I_F (mA)	I_{FP}*1 (mA)	V_R (V)	P_D (mW)	T_{opr} (℃)	T_{stg} (℃)	Mounting
					Typ.	Max.	Min.	Typ.	Max.	Min.	Typ.											
	2x3x4 Rectangular Type																					
	OSB5SA7BA1B		Blue	Water Clear	3.1	3.6	465	470	475	330	600	100	20	10	5	30	100	5	108	-30~+85	-40~+100	Wave Soldering
	OSG5DA7BA1B		Pure Green	Water Clear	3.1	3.6	520	525	530	750	1200	100	20	10	5	30	100	5	108	-30~+85	-40~+100	
	OSV5HL7BA1B		Violet	Water Clear	3.1	3.6	400	405	410	5	10	100	20	10	5	30	100	5	108	-30~+85	-40~+100	
	OSR5RU7BA1B		Red	Water Clear	2.1	2.6	620	625	630	330	450	100	20	10	5	30	100	5	78	-30~+85	-40~+100	
	OSY5RU7BA1B		Yellow	Water Clear	2.1	2.6	585	590	595	330	450	100	20	10	5	30	100	5	78	-30~+85	-40~+100	
	OSO5JA7BA1B		Orange	Water Clear	2.1	2.6	600	605	610	330	450	100	20	10	5	30	100	5	78	-30~+85	-40~+100	
	OSR5PA7BA1B		Red	Water Clear	2.1	2.6	620	625	630	500	800	100	20	10	5	50	120	5	130	-30~+85	-40~+100	
	OSY5PA7BA1B		Yellow	Water Clear	2.1	2.6	585	590	595	500	800	100	20	10	5	50	120	5	130	-30~+85	-40~+100	
	OSO5GA7BA1B		Orange	Water Clear	2.1	2.6	600	605	610	500	800	100	20	10	5	50	120	5	130	-30~+85	-40~+100	
	OSR5MA7BA1B		Red	Water Clear	2.1	2.6	620	625	630	750	1200	100	20	10	5	50	120	5	130	-30~+85	-40~+100	
	OSY5MA7BA1B		Yellow	Water Clear	2.1	2.6	585	590	595	750	1200	100	20	10	5	50	120	5	130	-30~+85	-40~+100	
	OSO5MA7BA1B		Orange	Water Clear	2.1	2.6	600	605	610	750	1200	100	20	10	5	50	120	5	130	-30~+85	-40~+100	
	2x5x7 Rectangular Type																					
	OSB5SA71A1B		Blue	Water Clear	3.1	3.6	465	470	475	500	750	100	20	10	5	30	100	5	108	-30~+85	-40~+100	Wave Soldering
	OSG5DA71A1B		Pure Green	Water Clear	3.1	3.6	520	525	530	1560	2500	100	20	10	5	30	100	5	108	-30~+85	-40~+100	
	OSV5HL71A1B		Violet	Water Clear	3.1	3.6	400	405	410	5	15	100	20	10	5	30	100	5	108	-30~+85	-40~+100	
	OSR5RU71A1B		Red	Water Clear	2.1	2.6	620	625	630	500	700	100	20	10	5	30	100	5	78	-30~+85	-40~+100	
	OSY5RU71A1B		Yellow	Water Clear	2.1	2.6	585	590	595	500	700	100	20	10	5	30	100	5	78	-30~+85	-40~+100	
	OSO5JA71A1B		Orange	Water Clear	2.1	2.6	600	605	610	500	700	100	20	10	5	30	100	5	78	-30~+85	-40~+100	
	OSR5PA71A1B		Red	Water Clear	2.1	2.6	620	625	630	1120	1500	100	20	10	5	50	120	5	130	-30~+85	-40~+100	
	OSY5PA71A1B		Yellow	Water Clear	2.1	2.6	585	590	595	1120	1500	100	20	10	5	50	120	5	130	-30~+85	-40~+100	
	OSO5GA71A1B		Orange	Water Clear	2.1	2.6	600	605	610	1120	1500	100	20	10	5	50	120	5	130	-30~+85	-40~+100	
	OSR5MA71A1B		Red	Water Clear	2.1	2.6	620	625	630	1560	2000	100	20	10	5	50	120	5	130	-30~+85	-40~+100	
	OSY5MA71A1B		Yellow	Water Clear	2.1	2.6	585	590	595	1560	2000	100	20	10	5	50	120	5	130	-30~+85	-40~+100	
	OSO5MA71A1B		Orange	Water Clear	2.1	2.6	600	605	610	1560	2000	100	20	10	5	50	120	5	130	-30~+85	-40~+100	

*1 Pulse Width≦10 ms, Duty Ratio≦1/10
*2 See Table For Part Number Formation
*3 Axial Direction (Luminous Intensity)
*4 Please Refer to CIE 1931 Chromaticity Digram
*5 Devices are Sorted By 5nm Wavelength Ranges

Lamp Type Outline Dimensions

OSX5XS3131A

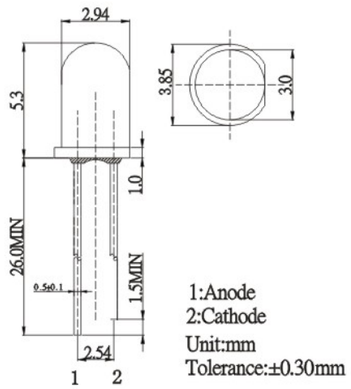

OSX5XS5A31A/OSXXXS5A31A/OST1XX5A3XA

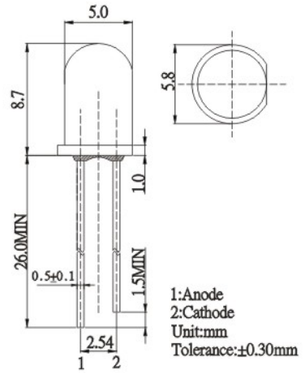

OSXXXC313XA

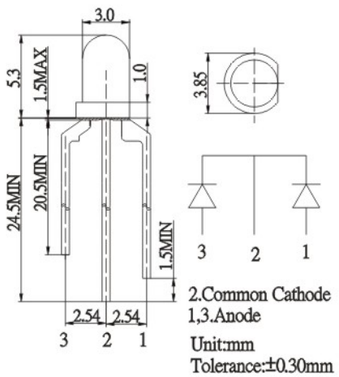

OSXXXC5B3XA

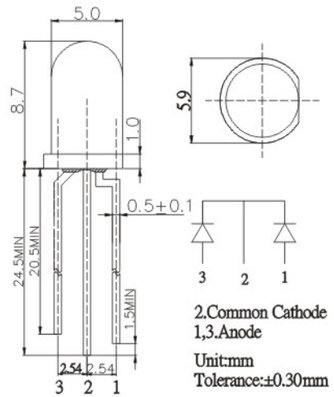

OSX5XX5HA1D

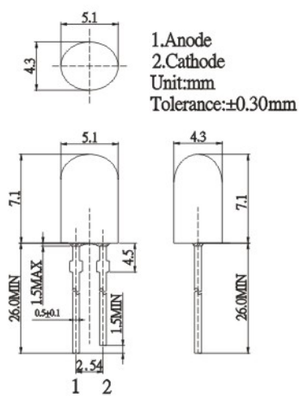

OSX5XX5471D

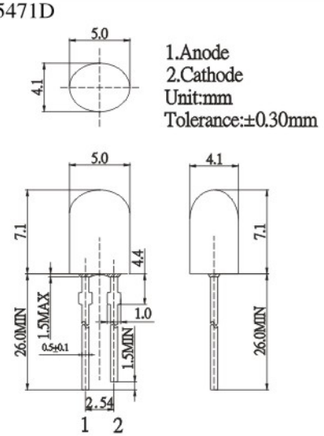

OSX5XX3131A

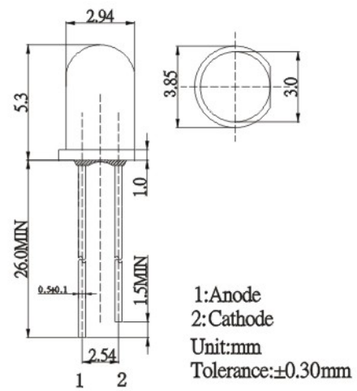

OSX5XX5111A

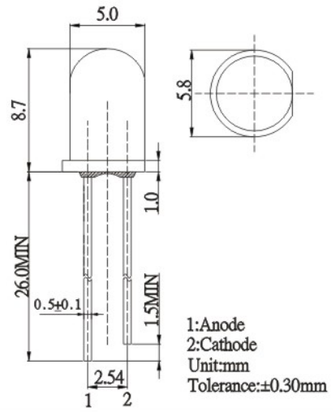

OSX5XX8131A

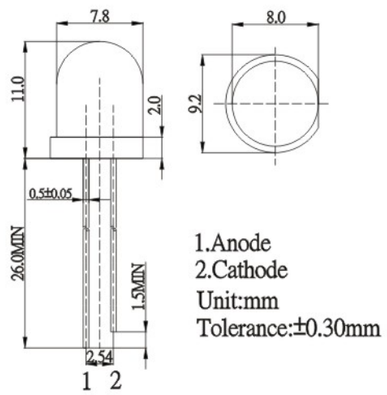

OSX5XXA131A

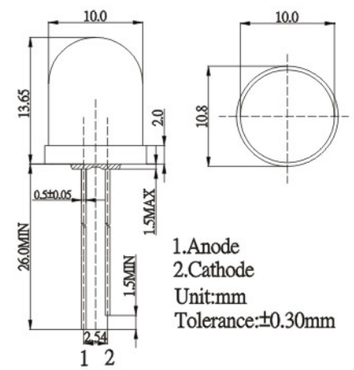

OSX5XX7331A

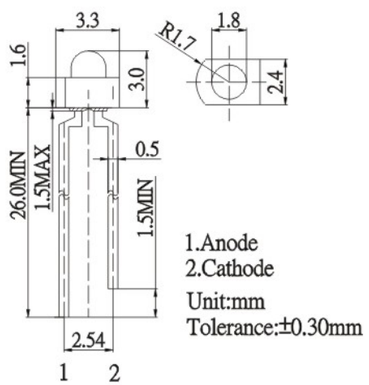

OSX5XX4131A

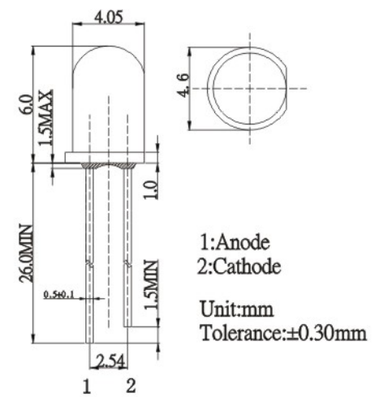

OSX5XX56A1A

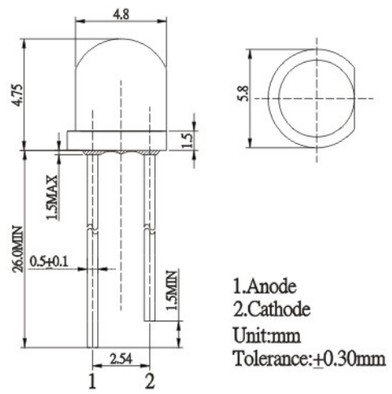

OSX5XX87A1A

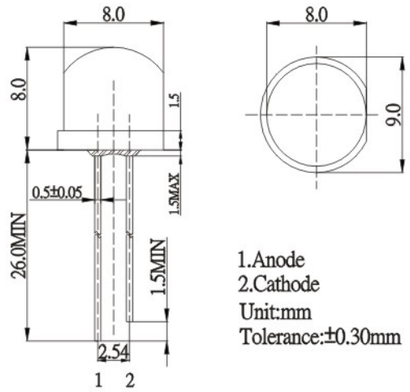

OSX5XX57E1A

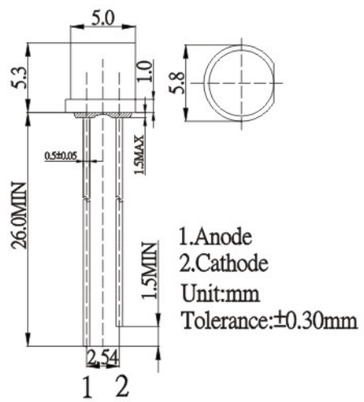

OSX5XX82E1A

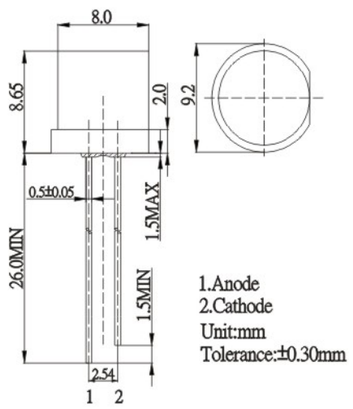

OSX5XX5201A

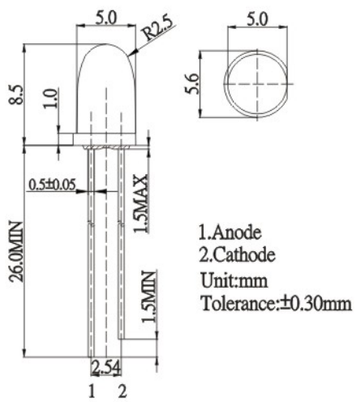

OSX5XXA201A

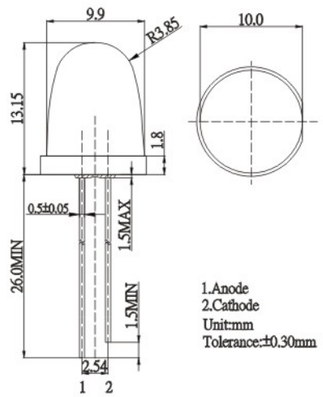

OSX5XX5MC1B

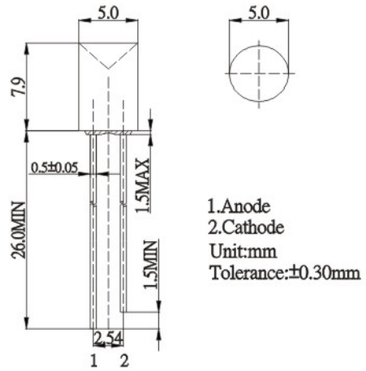

OSX5XX83C1A

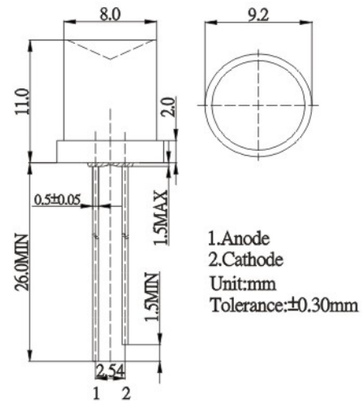

OSX5XX7BA1B

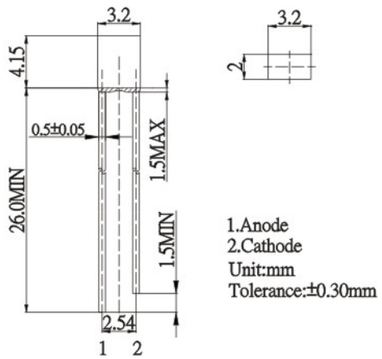

OSX5XX71A1B

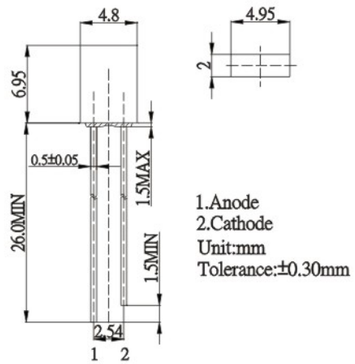

OSTAMC5B3XA

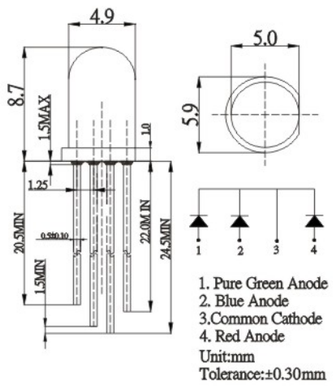

Xeon Power Type

Package	Part Number*2	Emitting Color		Lens Type	Forward Voltage VF (V)		Color Temperature CCT(K)*4			Luminous Flux (lm)*3		Directivity 2θ1/2 (degree)	IF (mA)	Reverse Current I_R Max.(uA)	V_R (V)	Absolute Maximum Rating (Ta=25℃)						Mounting
					Typ.	Max.	Min.	Typ.	Max.	Min.	Typ.					I_F (mA)	I_{FP}*1 (mA)	V_R (V)	P_D (mW)	T_{opr} (℃)	T_{stg} (℃)	
	0.5W Xeon Power Type																					
	OSW4XMEHC1E		Cool White	Water Clear	3.3	4.0	6000	6500	7000	20	30	120	150	10	5	200	250	5	800	-30~+85	-40~+100	Reflow
	OSM5XMEHC1E		Warm White	Water Clear	3.3	4.0	2800	3000	3200	15	20	120	150	10	5	200	250	5	800	-30~+85	-40~+100	
	1W Xeon Power Type																					
	OSW4XME1C1E		Cool White	Water Clear	3.3	4.0	6000	6500	7000	75	85	120	350	10	5	400	500	5	1600	-30~+85	-40~+100	Reflow
	OSM5XME1C1E		Warm White	Water Clear	3.3	4.0	2800	3000	3200	60	75	120	350	10	5	400	500	5	1600	-30~+85	-40~+100	
	3W Xeon Power Type																					
	OSW4XME3C1E		Cool White	Water Clear	3.3	4.0	6000	6500	7000	180	200	120	700	10	5	800	1000	5	3200	-30~+85	-40~+100	Reflow
	OSM5XME3C1E		Warm White	Water Clear	3.3	4.0	2800	3000	3200	160	180	120	700	10	5	800	1000	5	3200	-30~+85	-40~+100	

Package	Part Number*2	Emitting Color		Lens Type	Forward Voltage VF (V)		Dominant Wavelength Wd(nm)*5			Luminous Flux (lm)*3		Directivity 2θ1/2 (degree)	IF (mA)	Reverse Current I_R Max.(uA)	V_R (V)	Absolute Maximum Rating (Ta=25℃)						Mounting
					Typ.	Max.	Min.	Typ.	Max.	Min.	Typ.					I_F (mA)	I_{FP}*1 (mA)	V_R (V)	P_D (mW)	T_{opr} (℃)	T_{stg} (℃)	
	0.5W Xeon Power Type																					
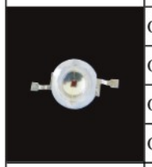	OSB5XMEHC1E		Blue	Water Clear	3.3	4.0	465	470	475	5	10	120	150	10	5	200	250	5	800	-30~+85	-40~+100	Reflow
	OSG5XMEHC1E		Pure Green	Water Clear	3.3	4.0	520	525	530	20	30	120	150	10	5	200	250	5	800	-30~+85	-40~+100	
	OSR5XMEHC1E		Red	Water Clear	2.5	3.0	620	625	630	15	20	120	150	10	5	200	250	5	600	-30~+85	-40~+100	
	OSY5XMEHC1E		Yellow	Water Clear	2.5	3.0	585	590	595	15	20	120	150	10	5	200	250	5	600	-30~+85	-40~+100	
	1W Xeon Power Type																					
	OSV5XME1C1E		Violet	Water Clear	3.3	4.0	400	405	410	200mW	250mW	120	350	10	5	400	500	5	1600	-30~+85	-40~+100	Reflow
	OSB5XME1C1E		Blue	Water Clear	3.3	4.0	465	470	475	10	15	120	350	10	5	400	500	5	1600	-30~+85	-40~+100	
	OSG3XME1C1E		Bluish Green	Water Clear	3.3	4.0	500	505	510	65	75	120	350	10	5	400	500	5	1600	-30~+85	-40~+100	
	OSG5XME1C1E		Pure Green	Water Clear	3.3	4.0	520	525	530	65	75	120	350	10	5	400	500	5	1600	-30~+85	-40~+100	
	OSR5XME1C1E		Red	Water Clear	2.5	3.0	620	625	630	40	50	120	350	10	5	400	500	5	1200	-30~+85	-40~+100	
	OSY5XME1C1E		Yellow	Water Clear	2.5	3.0	585	590	595	40	50	120	350	10	5	400	500	5	1200	-30~+85	-40~+100	
	3W Xeon Power Type																					
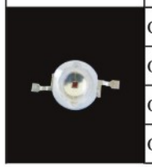	OSB5XME3C1E		Blue	Water Clear	3.3	4.0	465	470	475	20	30	120	700	10	5	800	1000	5	3200	-30~+85	-40~+100	Reflow
	OSG5XME3C1E		Pure Green	Water Clear	3.3	4.0	520	525	530	120	130	120	700	10	5	800	1000	5	3200	-30~+85	-40~+100	
	OSR5XME3C1E		Red	Water Clear	2.5	3.0	620	625	630	70	80	120	700	10	5	800	1000	5	2400	-30~+85	-40~+100	
	OSY5XME3C1E		Yellow	Water Clear	2.5	3.0	585	590	595	70	80	120	700	10	5	800	1000	5	2400	-30~+85	-40~+100	

*1 Pulse Width≦10 ms, Duty Ratio≦1/10

*2 See Table For Part Number Formation

*3 Axial Direction (Luminous Intensity)

*4 Please Refer to CIE 1931 Chromaticity Digram

*5 Devices are Sorted By 5nm Wavelength Ranges

Note:Do not drive at rated current more than 5 S without heatsink for Xeon Power emitter series.

Special Lighting LED

Tops Power Type

Package	Part Number*2	Emitting Color		Lens Type	Forward Voltage VF (V)		Color Temperature CCT(K)*4			Luminous Flux (lm)*3		Directivity 2θ1/2 (degree)	IF (mA)	Reverse Current I_R Max.(uA)	V_R (V)	Absolute Maximum Rating (Ta=25℃) I_F (mA)	I_{FP}*1 (mA)	V_R (V)	P_D (mW)	T_{opr} (℃)	T_{stg} (℃)	Mounting
					Typ.	Max.	Min.	Typ.	Max.	Min.	Typ.											
	0.5W Tops Power Type																					
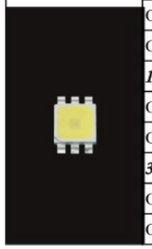	OSW4XATHC1E		Cool White	Yellow Diffused	3.3	4.0	6000	6500	7000	20	30	120	150	10	5	200	250	5	800	-30~+85	-40~+100	Reflow
	OSM5XATHC1E		Warm White	Yellow Diffused	3.3	4.0	2800	3000	3200	15	20	120	150	10	5	200	250	5	800	-30~+85	-40~+100	
	1W Tops Power Type																					
	OSW4XAT1C1E		Cool White	Yellow Diffused	3.3	4.0	6000	6500	7000	75	85	120	350	10	5	400	500	5	1600	-30~+85	-40~+100	Reflow
	OSM5XAT1C1E		Warm White	Yellow Diffused	3.3	4.0	2800	3000	3200	60	75	120	350	10	5	400	500	5	1600	-30~+85	-40~+100	
	3W Tops Power Type																					
	OSW4XAT3C1E		Cool White	Yellow Diffused	3.3	4.0	6000	6500	7000	180	200	120	700	10	5	800	1000	5	3200	-30~+85	-40~+100	Reflow
	OSM5XAT3C1E		Warm White	Yellow Diffused	3.3	4.0	2800	3000	3200	160	180	120	700	10	5	800	1000	5	3200	-30~+85	-40~+100	

Package	Part Number*2	Emitting Color		Lens Type	Forward Voltage VF (V)		Dominant Wavelength Wd(nm)*5			Luminous Flux (lm)*3		Directivity 2θ1/2 (degree)	IF (mA)	Reverse Current I_R Max.(uA)	V_R (V)	Absolute Maximum Rating (Ta=25℃) I_F (mA)	I_{FP}*1 (mA)	V_R (V)	P_D (mW)	T_{opr} (℃)	T_{stg} (℃)	Mounting
					Typ.	Max.	Min.	Typ.	Max.	Min.	Typ.											
	0.5W Tops Power Type																					
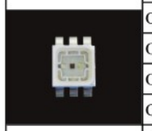	OSB5XATHC1E		Blue	Water Clear	3.3	4.0	465	470	475	5	10	120	150	10	5	200	250	5	800	-30~+85	-40~+100	Reflow
	OSG5XATHC1E		Pure Green	Water Clear	3.3	4.0	520	525	530	20	30	120	150	10	5	200	250	5	800	-30~+85	-40~+100	
	OSR5XATHC1E		Red	Water Clear	2.5	3.0	620	625	630	15	20	120	150	10	5	200	250	5	600	-30~+85	-40~+100	
	OSY5XATHC1E		Yellow	Water Clear	2.5	3.0	585	590	595	15	20	120	150	10	5	200	250	5	600	-30~+85	-40~+100	
	1W Tops Power Type																					
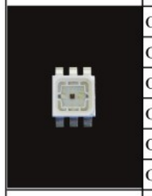	OSV5XAT1C1E		Violet	Water Clear	3.3	4.0	400	405	410	200mW	250mW	120	350	10	5	400	500	5	1600	-30~+85	-40~+100	Reflow
	OSB5XAT1C1E		Blue	Water Clear	3.3	4.0	465	470	475	10	15	120	350	10	5	400	500	5	1600	-30~+85	-40~+100	
	OSG3XAT1C1E		Bluish Green	Water Clear	3.3	4.0	500	505	510	65	75	120	350	10	5	400	500	5	1600	-30~+85	-40~+100	
	OSG5XAT1C1E		Pure Green	Water Clear	3.3	4.0	520	525	530	65	75	120	350	10	5	400	500	5	1600	-30~+85	-40~+100	
	OSR5XAT1C1E		Red	Water Clear	2.5	3.0	620	625	630	40	50	120	350	10	5	400	500	5	1200	-30~+85	-40~+100	
	OSY5XAT1C1E		Yellow	Water Clear	2.5	3.0	585	590	595	40	50	120	350	10	5	400	500	5	1200	-30~+85	-40~+100	
	3W Tops Power Type																					
	OSB5XAT3C1E		Blue	Water Clear	3.3	4.0	465	470	475	20	30	120	700	10	5	800	1000	5	3200	-30~+85	-40~+100	Reflow
	OSG5XAT3C1E		Pure Green	Water Clear	3.3	4.0	520	525	530	120	130	120	700	10	5	800	1000	5	3200	-30~+85	-40~+100	
	OSR5XAT3C1E		Red	Water Clear	2.5	3.0	620	625	630	70	80	120	700	10	5	800	1000	5	2400	-30~+85	-40~+100	
	OSY5XAT3C1E		Yellow	Water Clear	2.5	3.0	585	590	595	70	80	120	700	10	5	800	1000	5	2400	-30~+85	-40~+100	
	Tops H Power Full Color Type																					
	OSTCXBTHC1E		Pure Green	Water Clear	3.1	3.6	520	525	530	20	30	120	150	10	5	200	250	5	800	-30~+85	-40~+100	Reflow
			Red		2.1	2.6	620	625	630	15	20	120	150	10	5	200	250	5	600	-30~+85	-40~+100	
			Blue		3.1	3.6	465	470	475	5	10	120	150	10	5	200	250	5	800	-30~+85	-40~+100	
	Commercial 1 Power Full Color Type																					
	OSTCXBC1C1E		Pure Green	Water Clear	3.1	3.6	520	525	530	65	75	120	350	10	5	400	500	5	1600	-30~+85	-40~+100	Reflow
			Red		2.1	2.6	620	625	630	40	50	120	350	10	5	400	500	5	1200	-30~+85	-40~+100	
			Blue		3.1	3.6	465	470	475	10	15	120	350	10	5	400	500	5	3200	-30~+85	-40~+100	

*1 Pulse Width≦10 ms, Duty Ratio≦1/10
*2 See Table For Part Number Formation
*3 Axial Direction (Luminous Intensity)
*4 Please Refer to CIE 1931 Chromaticity Digram
*5 Devices are Sorted By 5nm Wavelength Ranges
Note:Do not drive at rated current more than 5 S without heatsink for Tops Power emitter series.

Special Lighting LED

Deluxe Power Type

Package	Part Number*2	Emitting Color		Lens Type	Forward Voltage VF (V)		Chromaticity coordinates*4 x		Chromaticity coordinates*4 y		Luminous Intensity IV(mcd)*3	
					Typ.	Max.	Min.	Max.	Min.	Max.	Min.	Typ.
	Φ5 Round Type Lamp											
	OSW57L5111P		Pure White	Water Clear	3.3	3.8	0.23	0.31	0.24	0.32	45000	60000
	OSM57L5111P		Warm White	Water Clear	3.3	3.8	0.41	0.49	0.37	0.45	30000	35000
	OSK57L5111P		Pink	Water Clear	3.3	3.8	0.41	0.49	0.13	0.21	8400	10000
	Φ3 Type SuperFlux											
	OSW57LZ161P		Pure White	Water Clear	3.3	3.8	0.23	0.31	0.24	0.32	10000	12000
	OSM57LZ161P		Warm White	Water Clear	3.3	3.8	0.41	0.49	0.37	0.45	5800	7000
	OSK57LZ161P		Pink	Water Clear	3.3	3.8	0.41	0.49	0.13	0.21	2180	2600
	Power Top SMD											
	OSW57LS3C1A		Pure White	Yellow Diffused	3.3	3.8	0.23	0.31	0.24	0.32	3000	4000
	OSM57LS3C1A		Warm White	Yellow Diffused	3.3	3.8	0.41	0.49	0.37	0.45	2180	3000
	OSK57LS3C1A		Pink	Red Diffused	3.3	3.8	0.41	0.49	0.13	0.21	500	900

Package	Part Number*2	Emitting Color		Lens Type	Forward Voltage VF (V)		Dominant Wavelength Wd(nm)*5			Luminous Intensity IV(mcd)*3	
					Typ.	Max.	Min.	Typ.	Max.	Min.	Typ.
	Φ5 Round Type Lamp										
	OSB56L5111P		Blue	Water Clear	3.3	3.8	465	470	475	25000	30000
	OSG38A5111P		Bluish Green	Water Clear	3.3	3.8	500	505	510	80000	100000
	OSG58A5111P		Pure Green	Water Clear	3.3	3.8	520	525	530	80000	100000
	OSR5CA5111P		Red	Water Clear	2.2	2.6	620	625	630	40000	55000
	OSY5CA5111P		Yellow	Water Clear	2.2	2.6	585	590	595	40000	55000
	OSO5CA5111P		Orange	Water Clear	2.2	2.6	600	605	610	40000	55000
	Φ3 Type SuperFlux										
	OSB56LZ161P		Blue	Water Clear	3.3	3.8	465	470	475	4200	5000
	OSG38AZ161P		Bluish Green	Water Clear	3.3	3.8	500	505	510	18000	22000
	OSG58AZ161P		Pure Green	Water Clear	3.3	3.8	520	525	530	18000	22000
	OSR5CAZ161P		Red	Water Clear	2.2	2.6	620	625	630	7000	8000
	OSY5CAZ161P		Yellow	Water Clear	2.2	2.6	585	590	595	7000	8000
	OSO5CAZ161P		Orange	Water Clear	2.2	2.6	600	605	610	7000	8000
	Power Top SMD										
	OSB56LS3C1A		Blue	Water Clear	3.3	3.8	465	470	475	500	900
	OSG38AS3C1A		Bluish Green	Water Clear	3.3	3.8	500	505	510	2180	3300
	OSG58AS3C1A		Pure Green	Water Clear	3.3	3.8	520	525	530	2180	3300
	OSR5CAS3C1A		Red	Water Clear	2.2	2.6	620	625	630	2180	2800
	OSY5CAS3C1A		Yellow	Water Clear	2.2	2.6	585	590	595	2180	2800
	OSO5CAS3C1A		Orange	Water Clear	2.2	2.6	600	605	610	2180	2800

*1 Pulse Width≦10 ms, Duty Ratio≦1/10
*2 See Table For Part Number Formation
*3 Axial Direction (Luminous Intensity)
*4 Please Refer to CIE 1931 Chromaticity Digram
*5 Devices are Sorted By 5nm Wavelength Ranges

Directivity 2θ1/2 (degree)	IF (mA)	Reverse Current I_R Max.(uA)	V_R (V)	Absolute Maximum Rating (Ta=25℃) I_F (mA)	I_{FP}*1 (mA)	V_R (V)	P_D (mW)	T_{opr} (℃)	T_{stg} (℃)	Mounting
15	50	10	5	50	100	5	190	-30~+85	-40~+100	Wave Soldering
15	50	10	5	50	100	5	190	-30~+85	-40~+100	
15	50	10	5	50	100	5	190	-30~+85	-40~+100	
60	50	10	5	50	100	5	190	-30~+85	-40~+100	Wave Soldering
60	50	10	5	50	100	5	190	-30~+85	-40~+100	
60	50	10	5	50	100	5	190	-30~+85	-40~+100	
120	50	10	5	50	100	5	190	-30~+85	-40~+100	Reflow
120	50	10	5	50	100	5	190	-30~+85	-40~+100	
120	50	10	5	50	100	5	190	-30~+85	-40~+100	

Directivity 2θ1/2 (degree)	IF (mA)	Reverse Current I_R Max.(uA)	V_R (V)	Absolute Maximum Rating (Ta=25℃) I_F (mA)	I_{FP}*1 (mA)	V_R (V)	P_D (mW)	T_{opr} (℃)	T_{stg} (℃)	Mounting
15	50	10	5	50	100	5	190	-30~+85	-40~+100	Wave Soldering
15	50	10	5	50	100	5	190	-30~+85	-40~+100	
15	50	10	5	50	100	5	190	-30~+85	-40~+100	
15	70	10	5	70	120	5	182	-30~+85	-40~+100	
15	70	10	5	70	120	5	182	-30~+85	-40~+100	
15	70	10	5	70	120	5	182	-30~+85	-40~+100	
60	50	10	5	50	100	5	190	-30~+85	-40~+100	Wave Soldering
60	50	10	5	50	100	5	190	-30~+85	-40~+100	
60	50	10	5	50	100	5	190	-30~+85	-40~+100	
60	70	10	5	70	120	5	182	-30~+85	-40~+100	
60	70	10	5	70	120	5	182	-30~+85	-40~+100	
60	70	10	5	70	120	5	182	-30~+85	-40~+100	
120	50	10	5	50	100	5	190	-30~+85	-40~+100	Reflow
120	50	10	5	50	100	5	190	-30~+85	-40~+100	
120	50	10	5	50	100	5	190	-30~+85	-40~+100	
120	70	10	5	70	120	5	182	-30~+85	-40~+100	
120	70	10	5	70	120	5	182	-30~+85	-40~+100	
120	70	10	5	70	120	5	182	-30~+85	-40~+100	

3 in 1 Type

	Part Number*2	Emitting Color		Lens Type	Forward Voltage VF (V)		Chromaticity coordinates*4 x		Chromaticity coordinates*4 y		Luminous Intensity IV(mcd)*3	
					Typ.	Max.	Min.	Max.	Min.	Max.	Min.	Typ.
	Tpower Φ5 Round Type											
	OSW5735141R		Pure White	Water Clear	9.3	10.8	0.23	0.31	0.24	0.32	14400	19000
	OSM5735141R		Warm White	Water Clear	9.3	10.8	0.41	0.49	0.37	0.45	12000	15000
	OSK5735141R		Pink	Water Clear	9.3	10.8	0.41	0.49	0.13	0.21	1560	1900
	Premium Power Φ10 Round Type											
	OSW573A131U		Pure White	Water Clear	9.3	10.8	0.23	0.31	0.24	0.32	22000	25000
	OSM573A131U		Warm White	Water Clear	9.3	10.8	0.41	0.49	0.37	0.45	18000	20000
	OSK573A131U		Pink	Water Clear	9.3	10.8	0.41	0.49	0.13	0.21	3000	3800
	Power Top Series											
	OSW573S3C1A		Pure White	Yellow Diffused	9.3	10.8	0.23	0.31	0.24	0.32	5800	7000
	OSM573S3C1A		Warm White	Yellow Diffused	9.3	10.8	0.41	0.49	0.37	0.45	42000	5000
	OSK573S3C1A		Pink	Red Diffused	9.3	10.8	0.41	0.49	0.13	0.21	1560	1900

Directivity 2θ1/2 (degree)	IF (mA)	Reverse Current I_R Max.(uA)	V_R (V)	Absolute Maximum Rating (Ta=25℃) I_F (mA)	I_{FP}*1 (mA)	V_R (V)	P_D (mW)	T_{opr} (℃)	T_{stg} (℃)	Mounting
40	20	10	15	30	100	15	324	-30~+85	-40~+100	Wave Soldering
40	20	10	15	30	100	15	324	-30~+85	-40~+100	
40	20	10	15	30	100	15	324	-30~+85	-40~+100	
30	20	10	15	30	100	15	324	-30~+85	-40~+100	Wave Soldering
30	20	10	15	30	100	15	324	-30~+85	-40~+100	
30	20	10	15	30	100	15	324	-30~+85	-40~+100	
120	20	10	15	30	100	15	324	-30~+85	-40~+100	Reflow
120	20	10	15	30	100	15	324	-30~+85	-40~+100	
120	20	10	15	30	100	15	324	-30~+85	-40~+100	

Package	Part Number*2	Emitting Color		Lens Type	Forward Voltage VF (V)		Dominant Wavelength Wd(nm)*5			Luminous Intensity IV(mcd)*3	
					Typ.	Max.	Min.	Typ.	Max.	Min.	Typ.
	Tpower Φ5 Round Type										
	OSB5635141R		Blue	Water Clear	9.3	10.8	465	470	475	3000	4500
	OSG3835141R		Bluish Green	Water Clear	9.3	10.8	500	505	510	12000	14000
	OSG5835141R		Pure Green	Water Clear	9.3	10.8	520	525	530	12000	14000
	OSR5M35141R		Red	Water Clear	6.3	7.8	620	625	630	8000	9000
	OSY5M35141R		Yellow	Water Clear	6.3	7.8	585	590	595	8000	9000
	OSO5M35141R		Orange	Water Clear	6.3	7.8	600	605	610	8000	9000
	Premium Power Φ10 Round Type										
	OSB563A131U		Blue	Water Clear	9.3	10.8	465	470	475	5800	6500
	OSG383A131U		Bluish Green	Water Clear	9.3	10.8	500	505	510	12000	14000
	OSG583A131U		Pure Green	Water Clear	9.3	10.8	520	525	530	12000	14000
	OSR5M3A131U		Red	Water Clear	6.3	7.8	620	625	630	8400	10000
	OSY5M3A131U		Yellow	Water Clear	6.3	7.8	585	590	595	8400	10000
	OSO5M3A131U		Orange	Water Clear	6.3	7.8	600	605	610	8400	10000
	Power Top SMD										
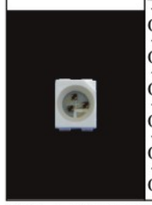	OSB563S3C1A		Blue	Water Clear	9.3	10.8	465	470	475	1120	1560
	OSG383S3C1A		Bluish Green	Water Clear	9.3	10.8	500	505	510	2180	3000
	OSG583S3C1A		Pure Green	Water Clear	9.3	10.8	520	525	530	2180	3000
	OSR5M3S3C1A		Red	Water Clear	6.3	7.8	620	625	630	2180	3000
	OSY5M3S3C1A		Yellow	Water Clear	6.3	7.8	585	590	595	2180	3000
	OSO5M3S3C1A		Orange	Water Clear	6.3	7.8	600	605	610	2180	3000

Directivity 2θ1/2 (degree)	IF (mA)	Reverse Current I_R Max.(uA)	V_R (V)	Absolute Maximum Rating (Ta=25℃) I_F (mA)	I_{FP}*1 (mA)	V_R (V)	P_D (mW)	T_{opr} (℃)	T_{stg} (℃)	Mounting
40	20	10	15	30	100	15	324	-30~+85	-40~+100	Wave Soldering
40	20	10	15	30	100	15	324	-30~+85	-40~+100	
40	20	10	15	30	100	15	324	-30~+85	-40~+100	
40	20	10	15	30	120	15	234	-30~+85	-40~+100	
40	20	10	15	30	120	15	234	-30~+85	-40~+100	
40	20	10	15	30	120	15	234	-30~+85	-40~+100	
30	20	10	15	30	100	15	324	-30~+85	-40~+100	Wave Soldering
30	20	10	15	30	100	15	324	-30~+85	-40~+100	
30	20	10	15	30	100	15	324	-30~+85	-40~+100	
30	20	10	15	30	120	15	234	-30~+85	-40~+100	
30	20	10	15	30	120	15	234	-30~+85	-40~+100	
30	20	10	15	30	120	15	234	-30~+85	-40~+100	
120	20	10	15	30	100	15	324	-30~+85	-40~+100	Reflow
120	20	10	15	30	100	15	324	-30~+85	-40~+100	
120	20	10	15	30	100	15	324	-30~+85	-40~+100	
120	20	10	15	30	120	15	234	-30~+85	-40~+100	
120	20	10	15	30	120	15	234	-30~+85	-40~+100	
120	20	10	15	30	120	15	234	-30~+85	-40~+100	

*1 Pulse Width≦10 ms, Duty Ratio≦1/10
*2 See Table For Part Number Formation
*3 Axial Direction (Luminous Intensity)
*4 Please Refer to CIE 1931 Chromaticity Digram
*5 Devices are Sorted By 5nm Wavelength Ranges

Special Lighting LED

Super Flux Type

Package	Part Number*2	Emitting Color		Lens Type	Forward Voltage VF (V)		Chromaticity coordinates*4 x		Chromaticity coordinates*4 y		Luminous Intensity IV(mcd)*3	
					Typ.	Max.	Min.	Max.	Min.	Max.	Min.	Typ.
	Φ3 Type											
	OSW57LZ161D		Pure White	Water Clear	3.1	3.6	0.23	0.31	0.24	0.32	8400	10000
	OSM57LZ161D		Warm White	Water Clear	3.1	3.6	0.41	0.49	0.37	0.45	5800	7000
	OSK57LZ161D		Pink	Water Clear	3.1	3.6	0.41	0.49	0.13	0.21	2000	2500
	Φ5 Type											
	OSW57LZ2C1D		Pure White	Water Clear	3.1	3.6	0.23	0.31	0.24	0.32	4200	6000
	OSM57LZ2C1D		Warm White	Water Clear	3.1	3.6	0.41	0.49	0.37	0.45	2180	3500
	OSK57LZ2C1D		Pink	Water Clear	3.1	3.6	0.41	0.49	0.13	0.21	750	1000
	Arc Type											
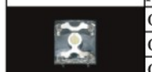	OSW57LZ4E1D		Pure White	Water Clear	3.1	3.6	0.23	0.31	0.24	0.32	1560	2000
	OSM57LZ4E1D		Warm White	Water Clear	3.1	3.6	0.41	0.49	0.37	0.45	750	1200
	OSK57LZ4E1D		Pink	Water Clear	3.1	3.6	0.41	0.49	0.13	0.21	220	330
	Flat Type											
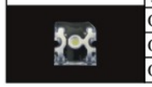	OSW57LZ3K1D		Pure White	Water Clear	3.1	3.6	0.23	0.31	0.24	0.32	1120	1560
	OSM57LZ3K1D		Warm White	Water Clear	3.1	3.6	0.41	0.49	0.37	0.45	750	1000
	OSK57LZ3K1D		Pink	Water Clear	3.1	3.6	0.41	0.49	0.13	0.21	220	300

Package	Part Number*2	Emitting Color		Lens Type	Forward Voltage VF (V)		Dominant Wavelength Wd(nm)*5			Luminous Intensity IV(mcd)*3	
					Typ.	Max.	Min.	Typ.	Max.	Min.	Typ.
	Φ3 Type										
	OSB56LZ161D		Blue	Water Clear	3.1	3.6	465	470	475	4000	5000
	OSG58AZ161D		Pure Green	Water Clear	3.1	3.6	520	525	530	12000	15000
	OSR5PAZ161D		Red	Water Clear	2.1	2.6	620	625	630	7000	8400
	OSY5PAZ161D		Yellow	Water Clear	2.1	2.6	585	590	595	7000	8400
	OSO5GAZ161D		Orange	Water Clear	2.1	2.6	600	605	610	7000	8400
	Φ5 Type										
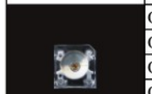	OSB56LZ2C1D		Blue	Water Clear	3.1	3.6	465	470	475	2180	3000
	OSG58AZ2C1D		Pure Green	Water Clear	3.1	3.6	520	525	530	8400	10000
	OSR5PAZ2C1D		Red	Water Clear	2.1	2.6	620	625	630	3000	4000
	OSY5PAZ2C1D		Yellow	Water Clear	2.1	2.6	585	590	595	3000	4000
	OSO5GAZ2C1D		Orange	Water Clear	2.1	2.6	600	605	610	3000	4000
	OSTBMAZ2C1D		Red	Water Clear	2.1	2.6	620	625	630	1560	2300
			Pure Green	Water Clear	3.1	3.6	520	525	530	3000	4000
			Blue	Water Clear	3.1	3.6	465	470	475	750	1200
	Arc Type										
	OSB56LZ4E1D		Blue	Water Clear	3.1	3.6	465	470	475	500	750
	OSG58AZ4E1D		Pure Green	Water Clear	3.1	3.6	520	525	530	3000	4000
	OSR5PAZ4E1D		Red	Water Clear	2.1	2.6	620	625	630	750	1200
	OSY5PAZ4E1D		Yellow	Water Clear	2.1	2.6	585	590	595	750	1200
	OSO5GAZ4E1D		Orange	Water Clear	2.1	2.6	600	605	610	750	1200
	Flat Type										
	OSB56LZ3K1D		Blue	Water Clear	3.1	3.6	465	470	475	500	700
	OSG58AZ3K1D		Pure Green	Water Clear	3.1	3.6	520	525	530	2180	3000
	OSR5PAZ3K1D		Red	Water Clear	2.1	2.6	620	625	630	750	1000
	OSY5PAZ3K1D		Yellow	Water Clear	2.1	2.6	585	590	595	750	1000
	OSO5GAZ3K1D		Orange	Water Clear	2.1	2.6	600	605	610	750	1000

*1 Pulse Width≦10 ms, Duty Ratio≦1/10
*2 See Table For Part Number Formation
*3 Axial Direction (Luminous Intensity)
*4 Please Refer to CIE 1931 Chromaticity Digram
*5 Devices are Sorted By 5nm Wavelength Ranges

Directivity 2θ1/2 (degree)	IF (mA)	Reverse Current I_R Max.(uA)	V_R (V)	Absolute Maximum Rating (Ta=25℃) I_F (mA)	I_{FP}*1 (mA)	V_R (V)	P_D (mW)	T_{opr} (℃)	T_{stg} (℃)	Mounting
60	30	10	5	50	100	5	180	-30~+85	-40~+100	Wave Soldering
60	30	10	5	50	100	5	180	-30~+85	-40~+100	
60	30	10	5	50	100	5	180	-30~+85	-40~+100	
120	30	10	5	50	100	5	180	-30~+85	-40~+100	Wave Soldering
120	30	10	5	50	100	5	180	-30~+85	-40~+100	
120	30	10	5	50	100	5	180	-30~+85	-40~+100	
140	30	10	5	50	100	5	180	-30~+85	-40~+100	Wave Soldering
140	30	10	5	50	100	5	180	-30~+85	-40~+100	
140	30	10	5	50	100	5	180	-30~+85	-40~+100	
180	30	10	5	50	100	5	180	-30~+85	-40~+100	Wave Soldering
180	30	10	5	50	100	5	180	-30~+85	-40~+100	
180	30	10	5	50	100	5	180	-30~+85	-40~+100	

Directivity 2θ1/2 (degree)	IF (mA)	Reverse Current I_R Max.(uA)	V_R (V)	Absolute Maximum Rating (Ta=25℃) I_F (mA)	I_{FP}*1 (mA)	V_R (V)	P_D (mW)	T_{opr} (℃)	T_{stg} (℃)	Mounting
60	30	10	5	50	100	5	180	-30~+85	-40~+100	Wave Soldering
60	30	10	5	50	100	5	180	-30~+85	-40~+100	
60	50	10	5	50	120	5	130	-30~+85	-40~+100	
60	50	10	5	50	120	5	130	-30~+85	-40~+100	
60	50	10	5	50	120	5	130	-30~+85	-40~+100	
120	30	10	5	50	100	5	180	-30~+85	-40~+100	Wave Soldering
120	30	10	5	50	100	5	180	-30~+85	-40~+100	
120	50	10	5	50	120	5	130	-30~+85	-40~+100	
120	50	10	5	50	120	5	130	-30~+85	-40~+100	
120	50	10	5	50	120	5	130	-30~+85	-40~+100	
120	20	10	5	50	120	5	130	-30~+85	-40~+100	
120	20	10	5	30	100	5	108	-30~+85	-40~+100	
120	20	10	5	30	100	5	108	-30~+85	-40~+100	
140	30	10	5	50	100	5	180	-30~+85	-40~+100	Wave Soldering
140	30	10	5	50	100	5	180	-30~+85	-40~+100	
140	50	10	5	50	120	5	130	-30~+85	-40~+100	
140	50	10	5	50	120	5	130	-30~+85	-40~+100	
140	50	10	5	50	120	5	130	-30~+85	-40~+100	
180	30	10	5	50	100	5	180	-30~+85	-40~+100	Wave Soldering
180	30	10	5	50	100	5	180	-30~+85	-40~+100	
180	50	10	5	50	120	5	130	-30~+85	-40~+100	
180	50	10	5	50	120	5	130	-30~+85	-40~+100	
180	50	10	5	50	120	5	130	-30~+85	-40~+100	

Super Flux Type

Package	Part Number*2	Emitting Color		Lens Type	Forward Voltage VF (V)		Chromaticity coordinates*4 x		Chromaticity coordinates*4 y		Luminous Intensity IV(mcd)*3	
					Typ.	Max.	Min.	Max.	Min.	Max.	Min.	Typ.
	Φ3 Type											
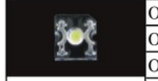	OSW57LZB11D		Pure White	Water Clear	3.1	3.6	0.23	0.31	0.24	0.32	18000	22000
	OSM57LZB11D		Warm White	Water Clear	3.1	3.6	0.41	0.49	0.37	0.45	12000	14400
	OSK57LZB11D		Pink	Water Clear	3.1	3.6	0.41	0.49	0.13	0.21	3000	4200
	Φ4.55 Type											
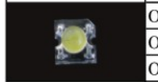	OSW57LZE31D		Pure White	Water Clear	3.1	3.6	0.23	0.31	0.24	0.32	12000	14000
	OSM57LZE31D		Warm White	Water Clear	3.1	3.6	0.41	0.49	0.37	0.45	8400	10000
	OSK57LZE31D		Pink	Water Clear	3.1	3.6	0.41	0.49	0.13	0.21	2180	2600
	Φ3 Type											
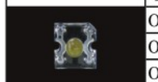	OSW57LZHA1D		Pure White	Water Clear	3.1	3.6	0.23	0.31	0.24	0.32	2180	3000
	OSM57LZHA1D		Warm White	Water Clear	3.1	3.6	0.41	0.49	0.37	0.45	1560	2250
	OSK57LZHA1D		Pink	Water Clear	3.1	3.6	0.41	0.49	0.13	0.21	500	600
	Oval Type											
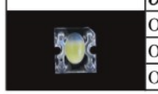	OSW57LZG71D		Pure White	Water Clear	3.1	3.6	0.23	0.31	0.24	0.32	8400	10000
	OSM57LZG71D		Warm White	Water Clear	3.1	3.6	0.41	0.49	0.37	0.45	5800	7500
	OSK57LZG71D		Pink	Water Clear	3.1	3.6	0.41	0.49	0.13	0.21	2180	3000

Package	Part Number*2	Emitting Color		Lens Type	Forward Voltage VF (V)		Dominant Wavelength Wd(nm)*5			Luminous Intensity IV(mcd)*3	
					Typ.	Max.	Min.	Typ.	Max.	Min.	Typ.
	Φ3 Type										
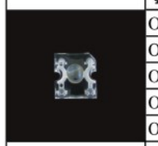	OSB56LZB11D		Blue	Water Clear	3.1	3.6	465	470	475	7000	8400
	OSG58AZB11D		Pure Green	Water Clear	3.1	3.6	520	525	530	25000	33000
	OSR5PAZB11D		Red	Water Clear	2.1	2.6	620	625	630	22000	25000
	OSY5PAZB11D		Yellow	Water Clear	2.1	2.6	585	590	595	22000	25000
	OSO5GAZB11D		Orange	Water Clear	2.1	2.6	600	605	610	22000	25000
	Φ4.55 Type										
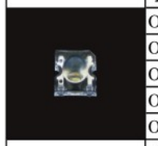	OSB56LZE31D		Blue	Water Clear	3.1	3.6	465	470	475	5800	7000
	OSG58AZE31D		Pure Green	Water Clear	3.1	3.6	520	525	530	20000	25000
	OSR5PAZE31D		Red	Water Clear	2.1	2.6	620	625	630	10000	12000
	OSY5PAZE31D		Yellow	Water Clear	2.1	2.6	585	590	595	10000	12000
	OSO5GAZE31D		Orange	Water Clear	2.1	2.6	600	605	610	10000	12000
	Φ3 Type										
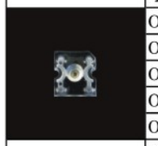	OSB56LZHA1D		Blue	Water Clear	3.1	3.6	465	470	475	750	900
	OSG58AZHA1D		Pure Green	Water Clear	3.1	3.6	520	525	530	2180	3000
	OSR5PAZHA1D		Red	Water Clear	2.1	2.6	620	625	630	1560	2250
	OSY5PAZHA1D		Yellow	Water Clear	2.1	2.6	585	590	595	1560	2250
	OSO5GAZHA1D		Orange	Water Clear	2.1	2.6	600	605	610	1560	2250
	Oval Type										
	OSB56LZG71D		Blue	Water Clear	3.1	3.6	465	470	475	4000	5500
	OSG58AZG71D		Pure Green	Water Clear	3.1	3.6	520	525	530	12000	16000
	OSR5PAZG71D		Red	Water Clear	2.1	2.6	620	625	630	7000	9000
	OSY5PAZG71D		Yellow	Water Clear	2.1	2.6	585	590	595	7000	9000
	OSO5GAZG71D		Orange	Water Clear	2.1	2.6	600	605	610	7000	9000

*1 Pulse Width≦10 ms, Duty Ratio≦1/10
*2 See Table For Part Number Formation
*3 Axial Direction (Luminous Intensity)
*4 Please Refer to CIE 1931 Chromaticity Digram
*5 Devices are Sorted By 5nm Wavelength Ranges

Directivity 2θ1/2 (degree)	IF (mA)	Reverse Current I_R Max.(uA)	V_R (V)	Absolute Maximum Rating (Ta=25℃) I_F (mA)	I_{FP}*1 (mA)	V_R (V)	P_D (mW)	T_{opr} (℃)	T_{stg} (℃)	Mounting
15	30	10	5	50	100	5	180	-30~+85	-40~+100	Wave Soldering
15	30	10	5	50	100	5	180	-30~+85	-40~+100	
15	30	10	5	50	100	5	180	-30~+85	-40~+100	
30	30	10	5	50	100	5	180	-30~+85	-40~+100	Wave Soldering
30	30	10	5	50	100	5	180	-30~+85	-40~+100	
30	30	10	5	50	100	5	180	-30~+85	-40~+100	
100	30	10	5	50	100	5	180	-30~+85	-40~+100	Wave Soldering
100	30	10	5	50	100	5	180	-30~+85	-40~+100	
100	30	10	5	50	100	5	180	-30~+85	-40~+100	
30/70	30	10	5	50	100	5	180	-30~+85	-40~+100	Wave Soldering
30/70	30	10	5	50	100	5	180	-30~+85	-40~+100	
30/70	30	10	5	50	100	5	180	-30~+85	-40~+100	

Directivity 2θ1/2 (degree)	IF (mA)	Reverse Current I_R Max.(uA)	V_R (V)	Absolute Maximum Rating (Ta=25℃) I_F (mA)	I_{FP}*1 (mA)	V_R (V)	P_D (mW)	T_{opr} (℃)	T_{stg} (℃)	Mounting
15	30	10	5	50	100	5	180	-30~+85	-40~+100	Wave Soldering
15	30	10	5	50	100	5	180	-30~+85	-40~+100	
15	50	10	5	50	120	5	130	-30~+85	-40~+100	
15	50	10	5	50	120	5	130	-30~+85	-40~+100	
15	50	10	5	50	120	5	130	-30~+85	-40~+100	
30	30	10	5	50	100	5	180	-30~+85	-40~+100	Wave Soldering
30	30	10	5	50	100	5	180	-30~+85	-40~+100	
30	50	10	5	50	120	5	130	-30~+85	-40~+100	
30	50	10	5	50	120	5	130	-30~+85	-40~+100	
30	50	10	5	50	120	5	130	-30~+85	-40~+100	
100	30	10	5	50	100	5	180	-30~+85	-40~+100	Wave Soldering
100	30	10	5	50	100	5	180	-30~+85	-40~+100	
100	50	10	5	50	120	5	130	-30~+85	-40~+100	
100	50	10	5	50	120	5	130	-30~+85	-40~+100	
100	50	10	5	50	120	5	130	-30~+85	-40~+100	
30/70	30	10	5	50	100	5	180	-30~+85	-40~+100	Wave Soldering
30/70	30	10	5	50	100	5	180	-30~+85	-40~+100	
30/70	50	10	5	50	120	5	130	-30~+85	-40~+100	
30/70	50	10	5	50	120	5	130	-30~+85	-40~+100	
30/70	50	10	5	50	120	5	130	-30~+85	-40~+100	

Surface Mount Type

Package	Part Number*2	Emitting Color		Lens Type	Forward Voltage VF (V)		Chromaticity coordinates*4 x		Chromaticity coordinates*4 y		Luminous Intensity IV(mcd)*3		Directivity 2θ1/2 (degree)	IF (mA)	Reverse Current I_R Max.(uA)	V_R (V)	Absolute Maximum Rating (Ta=25℃) I_F (mA)	I_{FP}*1 (mA)	V_R (V)	P_D (mW)	T_{opr} (℃)	T_{stg} (℃)	Mounting
					Typ.	Max.	Min.	Max.	Min.	Max.	Min.	Typ.											
	PLCC2 Low Decay Type																						
	OSW5DLS1C1A		Pure White	Yellow Diffused	3.1	3.6	0.23	0.31	0.24	0.32	1560	1900	120	20	10	5	30	100	5	108	-30~+85	-40~+100	Reflow
	OSM5DLS1C1A		Warm White	Yellow Diffused	3.1	3.6	0.41	0.49	0.37	0.45	750	1250	120	20	10	5	30	100	5	108	-30~+85	-40~+100	
	OSK5DLS1C1A		Pink	Red Diffused	3.1	3.6	0.41	0.49	0.13	0.21	220	380	120	20	10	5	30	100	5	108	-30~+85	-40~+100	

Package	Part Number*2	Emitting Color		Lens Type	Forward Voltage VF (V)		Dominant Wavelength Wd(nm)*5			Luminous Intensity IV(mcd)*3		Directivity 2θ1/2 (degree)	IF (mA)	Reverse Current I_R Max.(uA)	V_R (V)	Absolute Maximum Rating (Ta=25℃) I_F (mA)	I_{FP}*1 (mA)	V_R (V)	P_D (mW)	T_{opr} (℃)	T_{stg} (℃)	Mounting
					Typ.	Max.	Min.	Typ.	Max.	Min.	Typ.											
	PLCC2 Type																					
	OSB5SAS1C1A		Blue	Water Clear	3.1	3.6	465	470	475	220	400	120	20	10	5	30	100	5	108	-30~+85	-40~+100	Reflow
	OSG5DAS1C1A		Pure Green	Water Clear	3.1	3.6	520	525	530	750	1120	120	20	10	5	30	100	5	108	-30~+85	-40~+100	
	OSR5RUS1C1A		Red	Water Clear	2.1	2.6	620	625	630	220	350	120	20	10	5	30	100	5	78	-30~+85	-40~+100	
	OSY5RUS1C1A		Yellow	Water Clear	2.1	2.6	585	590	595	220	350	120	20	10	5	30	100	5	78	-30~+85	-40~+100	
	OSO5JAS1C1A		Orange	Water Clear	2.1	2.6	600	605	610	220	350	120	20	10	5	30	100	5	78	-30~+85	-40~+100	
	OSR5PAS1C1A		Red	Water Clear	2.1	2.6	620	625	630	500	700	120	20	10	5	50	120	5	130	-30~+85	-40~+100	
	OSY5PAS1C1A		Yellow	Water Clear	2.1	2.6	585	590	595	500	700	120	20	10	5	50	120	5	130	-30~+85	-40~+100	
	OSO5GAS1C1A		Orange	Water Clear	2.1	2.6	600	605	610	500	700	120	20	10	5	50	120	5	130	-30~+85	-40~+100	
	OSR5MAS1C1A		Red	Water Clear	2.1	2.6	620	625	630	750	1000	120	20	10	5	50	120	5	130	-30~+85	-40~+100	
	OSY5MAS1C1A		Yellow	Water Clear	2.1	2.6	585	590	595	750	1000	120	20	10	5	50	120	5	130	-30~+85	-40~+100	
	OSO5MAS1C1A		Orange	Water Clear	2.1	2.6	600	605	610	750	1000	120	20	10	5	50	120	5	130	-30~+85	-40~+100	
	PLCC4 Bi-Color Type																					
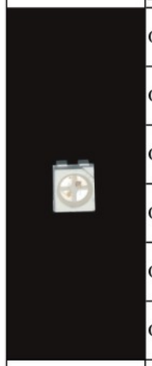	OSRGH4S2C1A		Red	Water Clear	2.1	2.6	620	625	630	100	150	120	20	10	5	30	100	5	78	-30~+85	-40~+100	Reflow
			Yellow Green		2.1	2.6	565	570	575	45	60	120	20	10	5	30	100	5	78	-30~+85	-40~+100	
	OSRBS4S2C1A		Red	Water Clear	2.1	2.6	620	625	630	100	150	120	20	10	5	30	100	5	78	-30~+85	-40~+100	
			Blue		3.1	3.6	465	470	475	100	130	120	20	10	5	30	100	5	108	-30~+85	-40~+100	
	OSRPS4S2C1A		Red	Water Clear	2.1	2.6	620	625	630	220	300	120	20	10	5	30	100	5	78	-30~+85	-40~+100	
			Pure Green		3.1	3.6	520	525	530	330	600	120	20	10	5	30	100	5	108	-30~+85	-40~+100	
	OSYGH4S2C1A		Yellow	Water Clear	2.1	2.6	585	590	595	100	170	120	20	10	5	30	100	5	78	-30~+85	-40~+100	
			Yellow Green		2.1	2.6	565	570	575	30	50	120	20	10	5	30	100	5	78	-30~+85	-40~+100	
	OSYBS4S2C1A		Yellow	Water Clear	2.1	2.6	585	590	595	330	600	120	20	10	5	30	100	5	78	-30~+85	-40~+100	
			Blue		3.1	3.6	465	470	475	150	200	120	20	10	5	30	100	5	108	-30~+85	-40~+100	
	OSBPS4S2C1A		Blue	Water Clear	3.1	3.6	465	470	475	150	200	120	20	10	5	30	100	5	108	-30~+85	-40~+100	
			Pure Green		3.1	3.6	520	525	530	330	600	120	20	10	5	30	100	5	108	-30~+85	-40~+100	
	Full Color Series																					
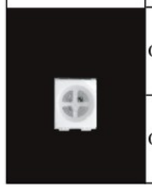	OSTBMAS2C1A		Red	Water Clear	2.1	2.6	620	625	630	750	1000	120	20	10	5	50	120	5	130	-30~+85	-40~+100	Reflow
			Pure Green		3.1	3.6	520	525	530	750	900	120	20	10	5	30	100	5	108	-30~+85	-40~+100	
			Blue		3.1	3.6	465	470	475	220	400	120	20	10	5	30	100	5	108	-30~+85	-40~+100	
	OSTBMAS2C2A		Red	White Diffused	2.1	2.6	620	625	630	330	500	120	20	10	5	50	120	5	130	-30~+85	-40~+100	
			Pure Green		3.1	3.6	520	525	530	330	450	120	20	10	5	30	100	5	108	-30~+85	-40~+100	
			Blue		3.1	3.6	465	470	475	150	200	120	20	10	5	30	100	5	108	-30~+85	-40~+100	

*1 Pulse Width≦10 ms, Duty Ratio≦1/10
*2 See Table For Part Number Formation
*3 Axial Direction (Luminous Intensity)
*4 Please Refer to CIE 1931 Chromaticity Digram
*5 Devices are Sorted By 5nm Wavelength Ranges

Surface Mount Type

Package	Part Number*2	Emitting Color		Lens Type	Forward Voltage VF (V)		Chromaticity coordinates*4 x		Chromaticity coordinates*4 y		Luminous Intensity IV (mcd)*3		Directivity 2θ1/2 (degree)	IF (mA)	Reverse Current I_R Max.(uA)	V_R (V)	Absolute Maximum Rating (Ta=25℃) I_F (mA)	I_{FP}*1 (mA)	V_R (V)	P_D (mW)	T_{opr} (℃)	T_{stg} (℃)	Mounting
					Typ.	Max.	Min.	Max.	Min.	Max.	Min.	Typ.											
	3528 PLCC6 Type																						
	OSW5DTS5C1A		Pure White	Yellow Diffused	3.1	3.6	0.23	0.31	0.24	0.32	3000	4500	120	60	10	5	75	100	5	270	-30~+85	-40~+100	Reflow
	OSM5DTS5C1A		Warm White	Yellow Diffused	3.1	3.6	0.41	0.49	0.37	0.45	2180	3500	120	60	10	5	75	100	5	270	-30~+85	-40~+100	
	OSK5DTS5C1A		Pink	Red Diffused	3.1	3.6	0.41	0.49	0.13	0.21	750	1120	120	60	10	5	75	100	5	270	-30~+85	-40~+100	
	5050 PLCC6 Type																						
	OSW5DTS4C1A		Pure White	Yellow Diffused	3.1	3.6	0.23	0.31	0.24	0.32	5800	7000	120	60	10	5	75	100	5	270	-30~+85	-40~+100	Reflow
	OSM5DTS4C1A		Warm White	Yellow Diffused	3.1	3.6	0.41	0.49	0.37	0.45	4200	5000	120	60	10	5	75	100	5	270	-30~+85	-40~+100	
	OSK5DTS4C1A		Pink	Red Diffused	3.1	3.6	0.41	0.49	0.13	0.21	1560	1900	120	60	10	5	75	100	5	270	-30~+85	-40~+100	

Package	Part Number*2	Emitting Color		Lens Type	Forward Voltage VF (V)		Dominant Wavelength Wd(nm)*5			Luminous Intensity (mcd)*3		Directivity 2θ1/2 (degree)	IF (mA)	Reverse Current I_R Max.(uA)	V_R (V)	Absolute Maximum Rating (Ta=25℃) I_F (mA)	I_{FP}*1 (mA)	V_R (V)	P_D (mW)	T_{opr} (℃)	T_{stg} (℃)	Mounting
					Typ.	Max.	Min.	Typ.	Max.	Min.	Typ.											
	3528 PLCC6 Type																					
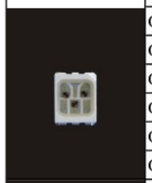	OSB5STS5C1A		Blue	Water Clear	3.1	3.6	465	470	475	1120	1560	120	60	10	5	75	100	5	270	-30~+85	-40~+100	Reflow
	OSG3DTS5C1A		Bluish Green	Water Clear	3.1	3.6	500	505	510	2180	3000	120	60	10	5	75	100	5	270	-30~+85	-40~+100	
	OSG5DTS5C1A		Pure Green	Water Clear	3.1	3.6	520	525	530	2180	3000	120	60	10	5	75	100	5	270	-30~+85	-40~+100	
	OSR5MTS5C1A		Red	Water Clear	2.1	2.6	620	625	630	2180	3000	120	60	10	5	90	100	5	234	-30~+85	-40~+100	
	OSY5MTS5C1A		Yellow	Water Clear	2.1	2.6	585	590	595	2180	3000	120	60	10	5	90	100	5	234	-30~+85	-40~+100	
	OSO5MTS5C1A		Orange	Water Clear	2.1	2.6	600	605	610	2180	3000	120	60	10	5	90	120	5	234	-30~+85	-40~+100	
	OSTCMBS5C1A		Pure Green	Water Clear	3.1	3.6	520	525	530	750	1120	120	20	10	5	30	100	5	108	-30~+85	-40~+100	
			Red		2.1	2.6	620	625	630	750	1000	120	20	10	5	50	120	5	130	-30~+85	-40~+100	
			Blue		3.1	3.6	465	470	475	220	400	120	20	10	5	30	100	5	108	-30~+85	-40~+100	
	OSTCMBS5C2A		Pure Green	White Diffused	3.1	3.6	520	525	530	330	500	120	20	10	5	30	100	5	108	-30~+85	-40~+100	
			Red		2.1	2.6	620	625	630	330	500	120	20	10	5	50	120	5	130	-30~+85	-40~+100	
			Blue		3.1	3.6	465	470	475	150	200	120	20	10	5	30	100	5	108	-30~+85	-40~+100	
	5050 PLCC6 Type																					
	OSB5STS4C1A		Blue	Water Clear	3.1	3.6	465	470	475	1120	1560	120	60	10	5	75	100	5	270	-30~+85	-40~+100	Reflow
	OSG3DTS4C1A		Bluish Green	Water Clear	3.1	3.6	500	505	510	2180	3000	120	60	10	5	75	100	5	270	-30~+85	-40~+100	
	OSG5DTS4C1A		Pure Green	Water Clear	3.1	3.6	520	525	530	2180	3000	120	60	10	5	75	100	5	270	-30~+85	-40~+100	
	OSR5PTS4C1A		Red	Water Clear	2.1	2.6	620	625	630	1560	1900	120	60	10	5	90	100	5	234	-30~+85	-40~+100	
	OSY5PTS4C1A		Yellow	Water Clear	2.1	2.6	585	590	595	1560	1900	120	60	10	5	90	100	5	234	-30~+85	-40~+100	
	OSO5GTS4C1A		Orange	Water Clear	2.1	2.6	600	605	610	1560	1900	120	60	10	5	90	120	5	234	-30~+85	-40~+100	
	OSR5MTS4C1A		Red	Water Clear	2.1	2.6	620	625	630	2180	3000	120	60	10	5	90	100	5	234	-30~+85	-40~+100	
	OSY5MTS4C1A		Yellow	Water Clear	2.1	2.6	585	590	595	2180	3000	120	60	10	5	90	100	5	234	-30~+85	-40~+100	
	OSO5MTS4C1A		Orange	Water Clear	2.1	2.6	600	605	610	2180	3000	120	60	10	5	90	120	5	234	-30~+85	-40~+100	
	OSTCMBS4C1A		Pure Green	Water Clear	3.1	3.6	520	525	530	750	1120	120	20	10	5	30	100	5	108	-30~+85	-40~+100	
			Red		2.1	2.6	620	625	630	750	1000	120	20	10	5	50	120	5	130	-30~+85	-40~+100	
			Blue		3.1	3.6	465	470	475	220	400	120	20	10	5	30	100	5	108	-30~+85	-40~+100	
	OSTCMBS4C2A		Pure Green	White Diffused	3.1	3.6	520	525	530	330	500	120	20	10	5	30	100	5	108	-30~+85	-40~+100	
			Red		2.1	2.6	620	625	630	330	500	120	20	10	5	50	120	5	130	-30~+85	-40~+100	
			Blue		3.1	3.6	465	470	475	150	200	120	20	10	5	30	100	5	108	-30~+85	-40~+100	

*1 Pulse Width≦10 ms, Duty Ratio≦1/10
*2 See Table For Part Number Formation
*3 Axial Direction (Luminous Intensity)
*4 Please Refer to CIE 1931 Chromaticity Digram
*5 Devices are Sorted By 5nm Wavelength Ranges

Outline Dimensions

Xeon Power and Tops Power Type

OS(W4/M5/V5/B5/G3/G5)XMEXC1E

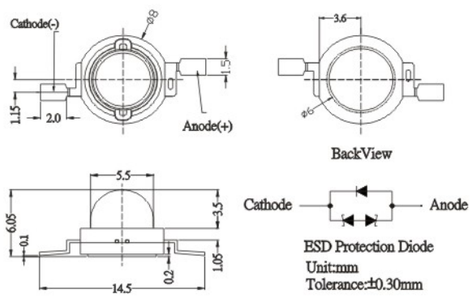

OS(R5/Y5)XMEXC1E

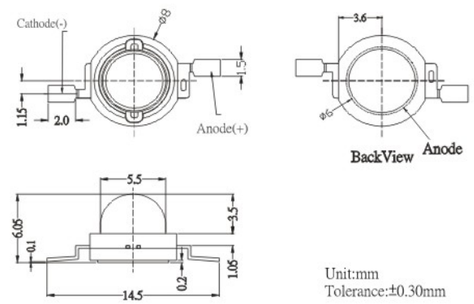

OS(W4/M5/V5/B5/G3/G5)XATXC1E

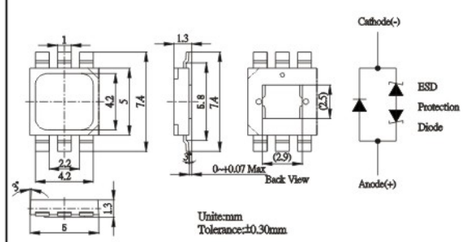

OS(R5/Y5)XATXC1E

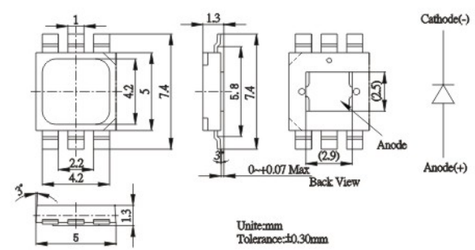

OSTCXBTHC1E

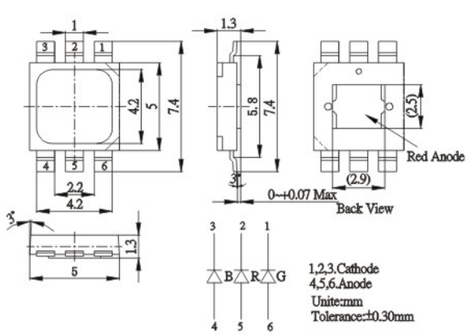

OSTCXBC1C1E

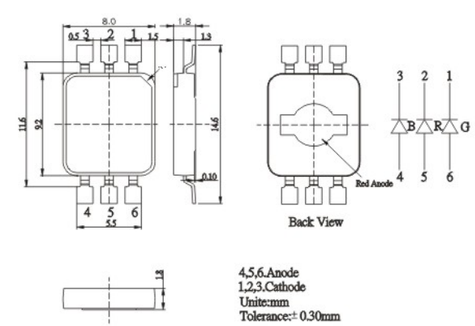

Deluxe Power Type

OS(W5/M5/K5/B5/G3/G5)XX5111P

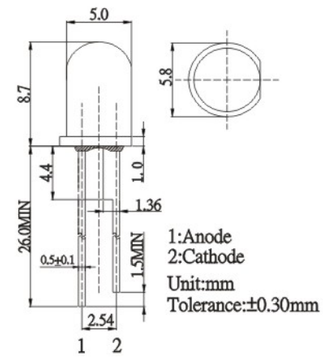

OS(R5/Y5)CA5111P

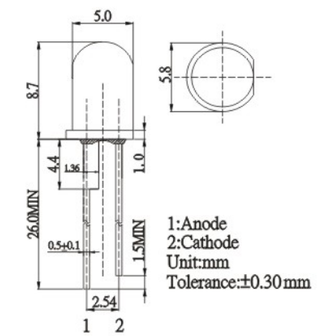

OS(W5/M5/K5/B5/G3/G5)XXZ161P

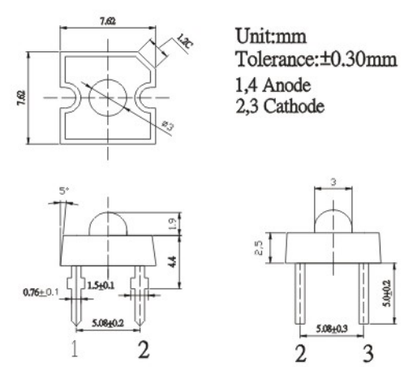

OS(R5/Y5)CAZ161P

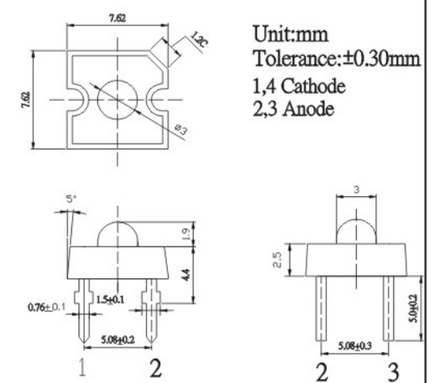

OS(W5/M5/K5/B5/G3/G5)XXS3C1A

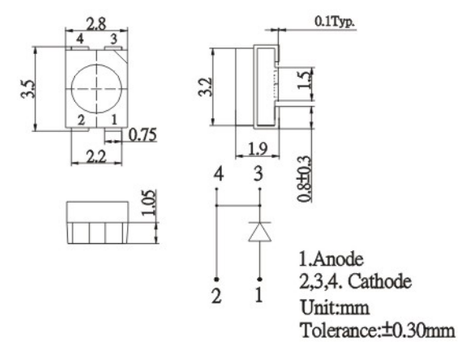

OS(R5/Y5)CAS3C1A

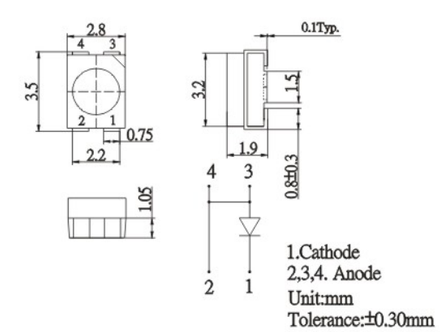

3 in 1 Type

OS(W5/M5/K5/B5/G5)X35141R

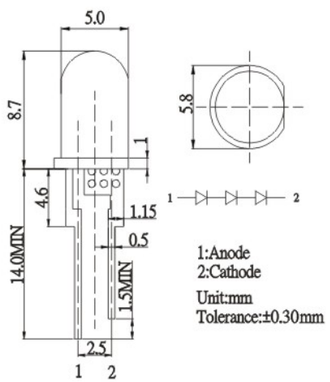

OS(W5/M5/K5/B5/G5)X3A131U

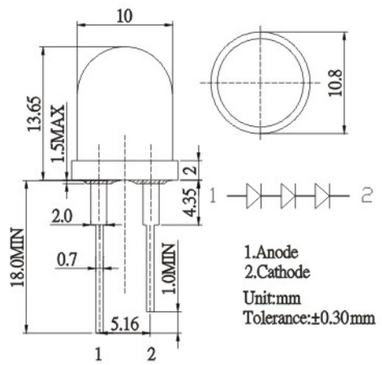

OS(W5/M5/K5/B5/G5)X3S3C1A

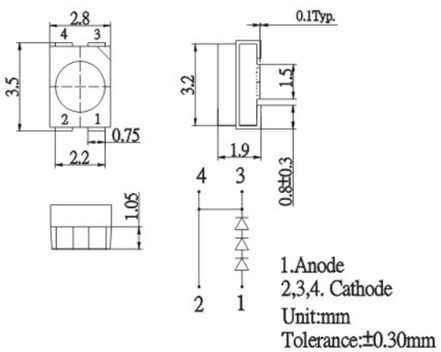

Super Flux Type

OS(W5/M5/K5/B5/G5/O5)XXZ161D

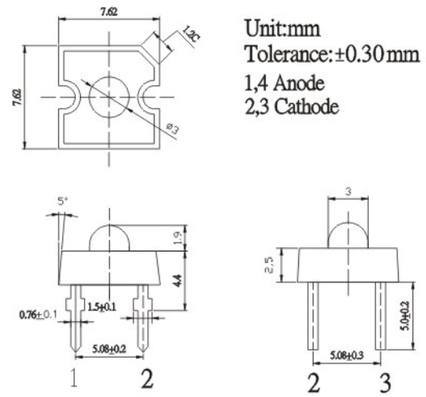

OS(R5/Y5)PAZ161D

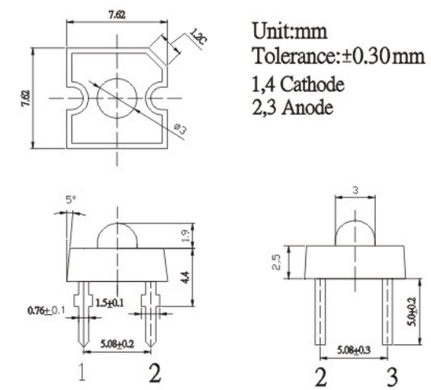

OS(W5/M5/K5/B5/G5/O5)XXZ2C1D

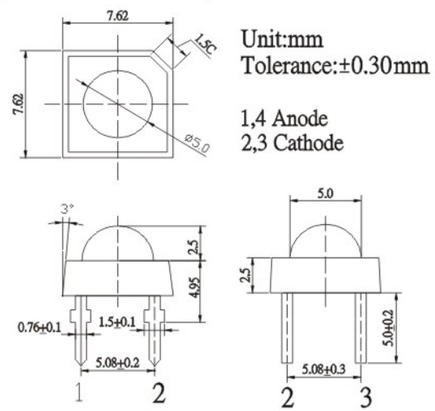

OS(R5/Y5)PAZ2C1D

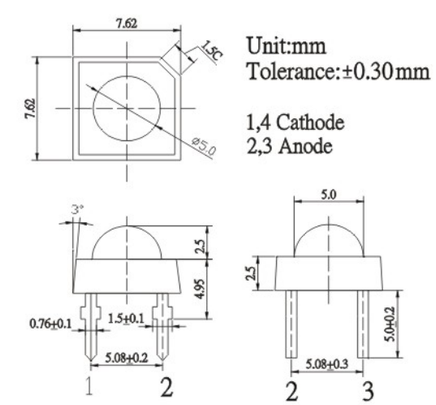

OS(W5/M5/K5/B5/G5/O5)XXZ4E1D

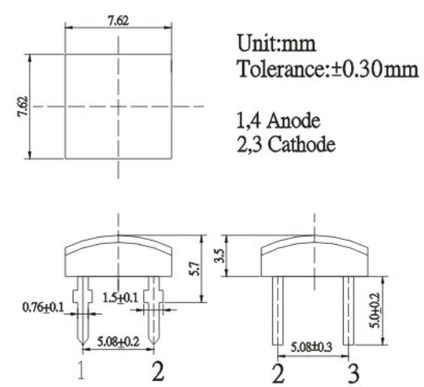

OS(R5/Y5)PAZ4E1D

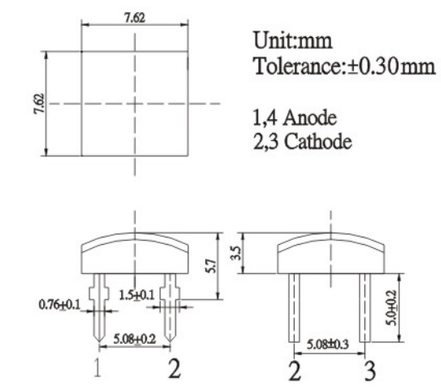

OS(W5/M5/K5/B5/G5/O5)XXZ3K1D

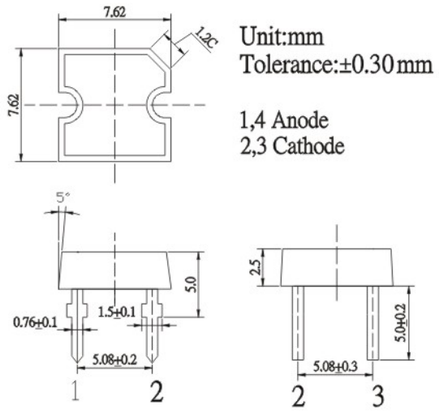

Unit:mm
Tolerance:±0.30mm

1,4 Anode
2,3 Cathode

OS(R5/Y5)PAZ3K1D

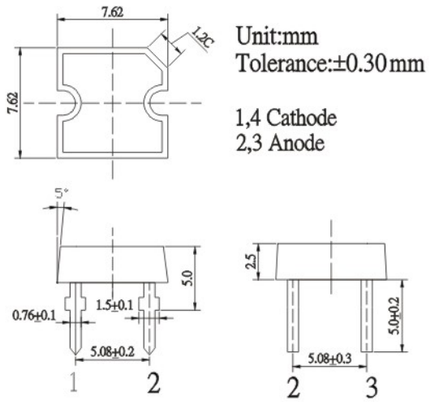

Unit:mm
Tolerance:±0.30mm

1,4 Cathode
2,3 Anode

OS(W5/M5/K5/B5/G5/O5)XXZB11D

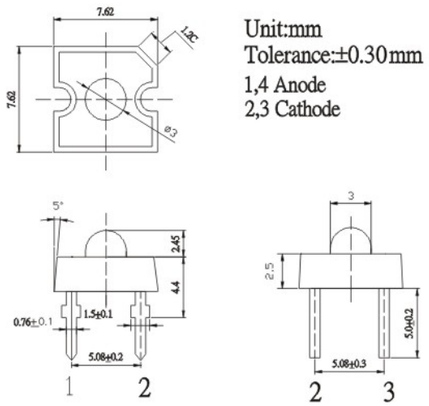

Unit:mm
Tolerance:±0.30mm
1,4 Anode
2,3 Cathode

OS(R5/Y5)PAZB11D

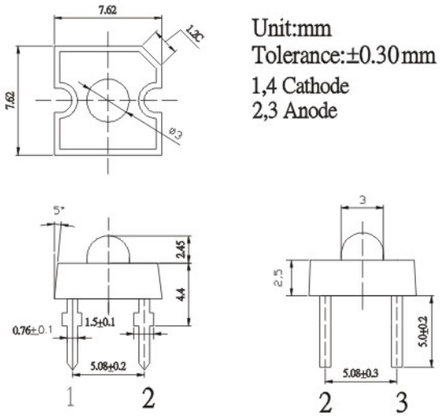

Unit:mm
Tolerance:±0.30mm
1,4 Cathode
2,3 Anode

OS(W5/M5/K5/B5/G5/O5)XXZE31D

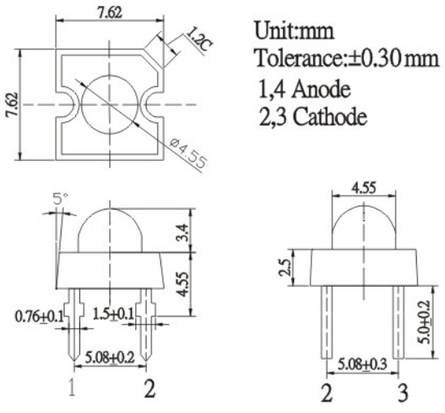

Unit:mm
Tolerance:±0.30mm
1,4 Anode
2,3 Cathode

OS(R5/Y5)PAZE31D

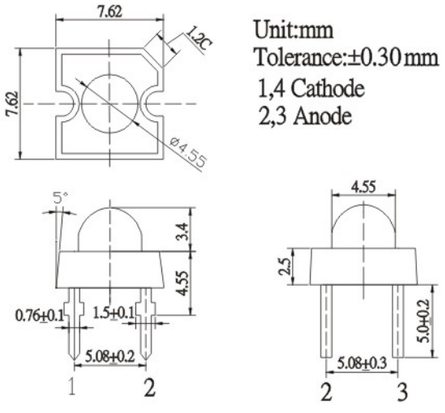

Unit:mm
Tolerance:±0.30mm
1,4 Cathode
2,3 Anode

OS(W5/M5/K5/B5/G5/O5)XXZHA1D

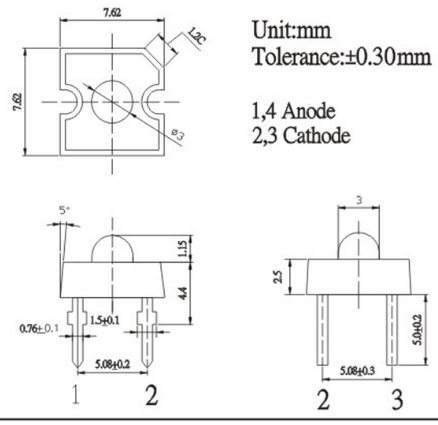

Unit:mm
Tolerance:±0.30mm

1,4 Anode
2,3 Cathode

OS(R5/Y5)PAZHA1D

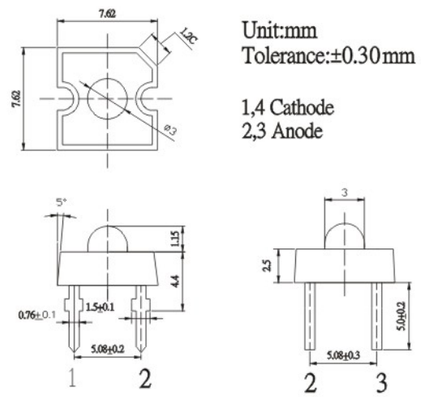

Unit:mm
Tolerance:±0.30mm

1,4 Cathode
2,3 Anode

OS(W5/M5/K5/B5/G5/O5)XXZG71D

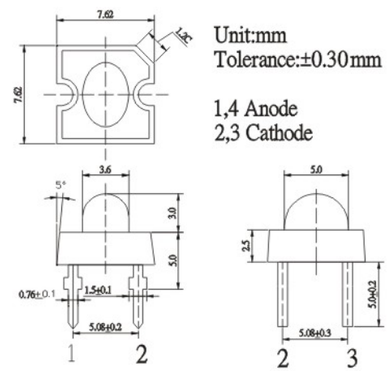

Unit:mm
Tolerance:±0.30mm

1,4 Anode
2,3 Cathode

OS(R5/Y5)PAZG71D

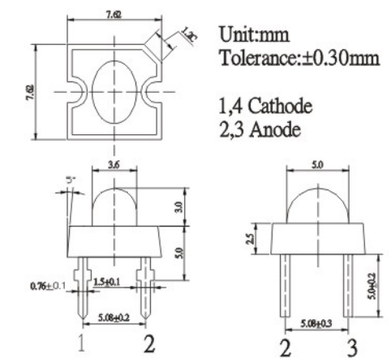

Unit:mm
Tolerance:±0.30mm

1,4 Cathode
2,3 Anode

OSTBMAZ2C1D

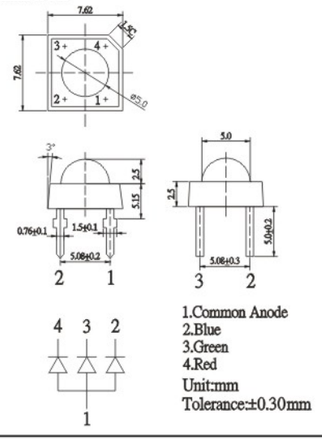

1.Common Anode
2.Blue
3.Green
4.Red
Unit:mm
Tolerance:±0.30mm

Surface Mount Type

OS(W5/M5/K5/B5/G5/R5/Y5/O5)XXS1C1A

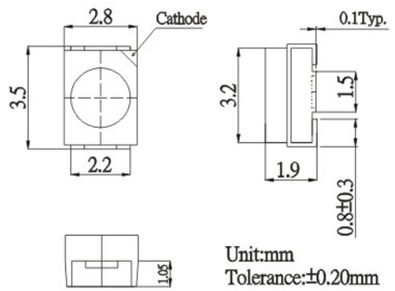

OS(R5/Y5)PAS1C1A

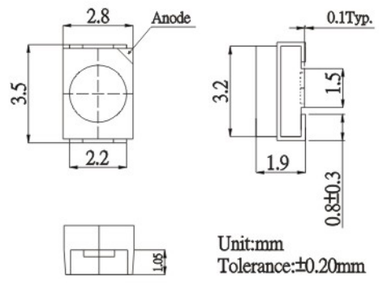

OSRGH4S2C1A

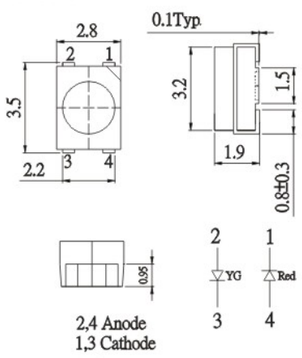

OSRBS4S2C1A

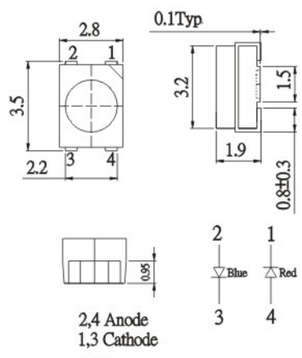

OSRPS4S2C1A

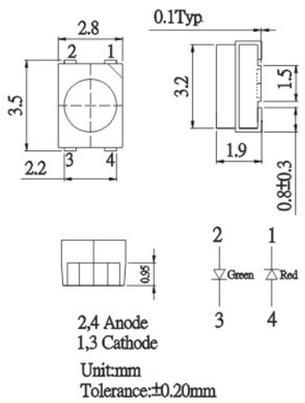

OSYGH4S2C1A

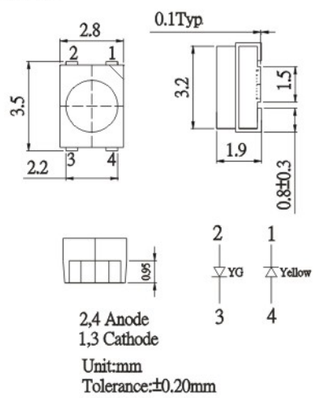

OSYBS4S2C1A

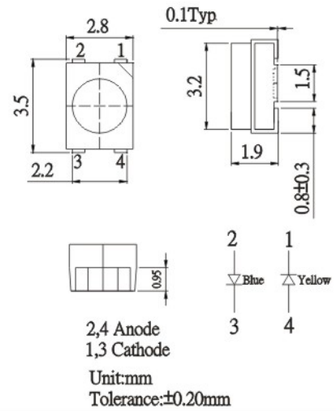

OSBPS4S2C1A

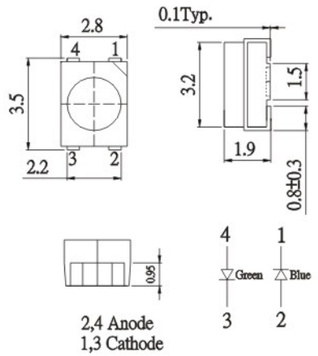

OSTBMAS2C1A

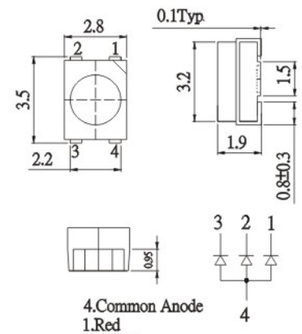

OS(W5/M5/K5/B5/G5/R5/Y5/O5)XTS5C1A

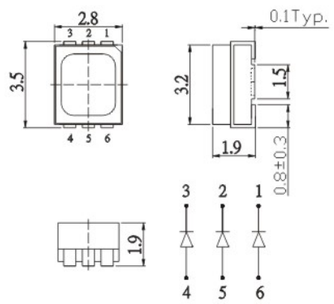

OSTCMBS5C1A

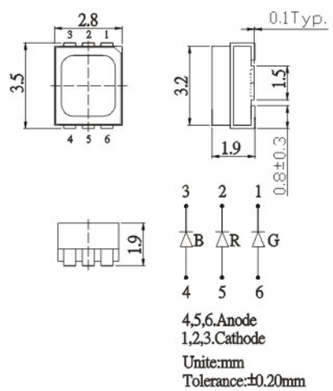

OS(W5/M5/K5/B5/G5/R5/Y5/O5)XTS4C1A

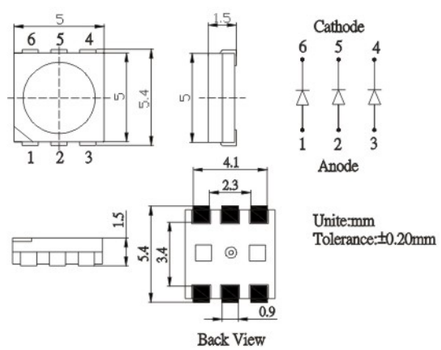

OS(R5/Y5)PTS4C1A

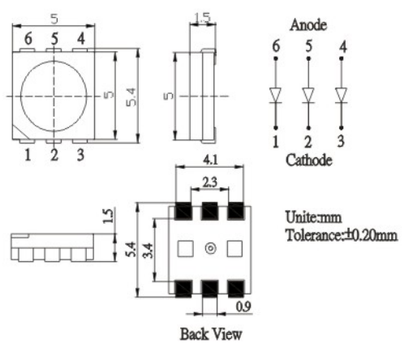

OSTCMBS4C1A

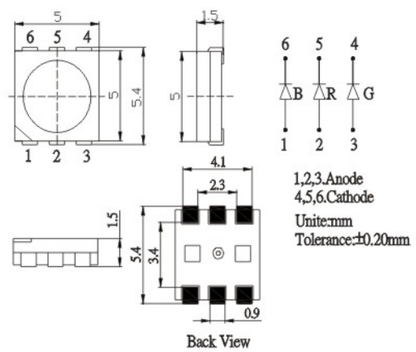

Display LED

Application :

- Full Color LED Screen
- Outdoor/Indoor Display
- Advertising Sign

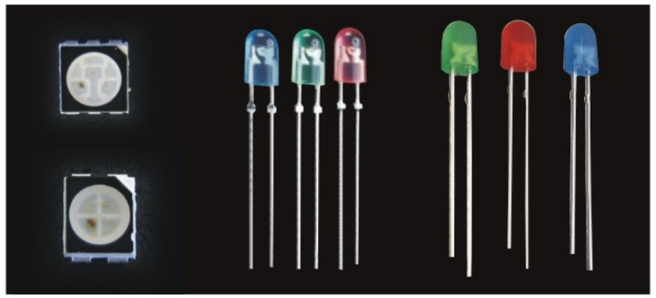

Surface Mount Type and Oval Lamp Type

Package	Part Number*2	Emitting Color		Lens Type	Forward Voltage VF (V)		Dominant Wavelength Wd(nm)*5			Luminous Flux (lm)*3		Directivity 2θ1/2 (degree)	IF (mA)	Reverse Current I_R Max.(uA)	V_R (V)	Absolute Maximum Rating (Ta=25℃)						Mounting
					Typ.	Max.	Min.	Typ.	Max.	Min.	Typ.					I_F (mA)	I_{FP}*1 (mA)	V_R (V)	P_D (mW)	T_{opr} (℃)	T_{stg} (℃)	
	Oval Lamp Type（1RG1B）																					
	OSB5SA5JB4D	🔵	Blue	Color Diffused	3.1	3.6	465	470	475	330	450	110/40	20	10	5	30	100	5	108	-30~+85	-40~+100	Wave Soldering
	OSG5DA5JB4D	🟢	Pure Green	Color Diffused	3.1	3.6	520	525	530	1560	2180	110/40	20	10	5	30	100	5	108	-30~+85	-40~+100	
	OSR5PA5JB4D	🔴	Red	Color Diffused	2.1	2.6	620	625	630	500	800	110/40	20	10	5	50	100	5	130	-30~+85	-40~+100	
	Oval Lamp Type(2R1G1B)																					
	OSB5SA5JB4D	🔵	Blue	Color Diffused	3.1	3.6	465	470	475	330	450	110/40	20	10	5	30	100	5	108	-30~+85	-40~+100	Wave Soldering
	OSG5DA5JB4D	🟢	Pure Green	Color Diffused	3.1	3.6	520	525	530	1560	2180	110/40	20	10	5	30	100	5	108	-30~+85	-40~+100	
	OSR5RU5JB4D	🔴	Red	Color Diffused	2.1	2.6	620	625	630	330	450	110/40	20	10	5	30	100	5	78	-30~+85	-40~+100	
	Oval Lamp Type(1R1G1B)																					
	OSB5SA5JB4D	🔵	Blue	Color Diffused	3.1	3.6	465	470	475	330	550	110/40	20	10	5	50	120	5	180	-30~+85	-40~+100	Wave Soldering
	OSG58A5JB4D	🟢	Pure Green	Color Diffused	3.1	3.6	520	525	530	1560	2500	110/40	20	10	5	50	120	5	180	-30~+85	-40~+100	
	OSR5CA5JB4D	🔴	Red	Color Diffused	2.1	2.6	620	625	630	750	1120	110/40	20	10	5	70	120	5	182	-30~+85	-40~+100	
	Oval Lamp Type(2R1G1B)																					
	OSB56A5JB4D	🔵	Blue	Color Diffused	3.1	3.6	465	470	475	330	550	110/40	20	10	5	50	120	5	180	-30~+85	-40~+100	Wave Soldering
	OSG58A5JB4D	🟢	Pure Green	Color Diffused	3.1	3.6	520	525	530	1560	2500	110/40	20	10	5	50	120	5	180	-30~+85	-40~+100	
	OSR5UU5JB4D	🔴	Red	Color Diffused	2.1	2.6	620	625	630	330	500	110/40	20	10	5	70	120	5	182	-30~+85	-40~+100	
	3528 PLCC4 Type																					
	OSTBPCS2C2B	🔵	Blue	White Diffused	3.1	3.6	465	470	475	150	250	120	20	10	5	30	100	5	108	-30~+85	-40~+100	Reflow
		🟢	Pure Green		3.1	3.6	520	525	530	500	700	120	20	10	5	30	100	5	108	-30~+85	-40~+100	
		🔴	Red		2.1	2.6	620	625	630	330	450	120	20	10	5	50	100	5	130	-30~+85	-40~+100	
	5050 PLCC6 Type																					
	OSTBPBS4C2B	🔵	Blue	White Diffused	3.1	3.6	465	470	475	150	250	120	20	10	5	30	100	5	108	-30~+85	-40~+100	Reflow
		🟢	Pure Green		3.1	3.6	520	525	530	500	700	120	20	10	5	30	100	5	108	-30~+85	-40~+100	
		🔴	Red		2.1	2.6	620	625	630	330	450	120	20	10	5	50	100	5	130	-30~+85	-40~+100	
	3528 PLCC6 Type																					
	OSTBPBS5C2B	🔵	Blue	White Diffused	3.1	3.6	465	470	475	150	250	120	20	10	5	30	100	5	108	-30~+85	-40~+100	Reflow
		🟢	Pure Green		3.1	3.6	520	525	530	500	700	120	20	10	5	30	100	5	108	-30~+85	-40~+100	
		🔴	Red		2.1	2.6	620	625	630	330	450	120	20	10	5	50	100	5	130	-30~+85	-40~+100	
	3528 PLCC4 Type																					
	OSTB8CS2C2B	🔵	Blue	White Diffused	3.1	3.6	465	470	475	220	400	120	20	10	5	50	120	5	180	-30~+85	-40~+100	Reflow
		🟢	Pure Green		3.1	3.6	520	525	530	1120	1560	120	20	10	5	50	120	5	180	-30~+85	-40~+100	
		🔴	Red		2.1	2.6	620	625	630	500	750	120	20	10	5	70	120	5	182	-30~+85	-40~+100	
	5050 PLCC6 Type																					
	OSTB8BS4C2B	🔵	Blue	White Diffused	3.1	3.6	465	470	475	220	400	120	20	10	5	50	120	5	180	-30~+85	-40~+100	Reflow
		🟢	Pure Green		3.1	3.6	520	525	530	1120	1560	120	20	10	5	50	120	5	180	-30~+85	-40~+100	
		🔴	Red		2.1	2.6	620	625	630	500	750	120	20	10	5	70	120	5	182	-30~+85	-40~+100	
	3528 PLCC6 Type																					
	OSTB8BS5C2B	🔵	Blue	White Diffused	3.1	3.6	465	470	475	220	400	120	20	10	5	50	120	5	180	-30~+85	-40~+100	Reflow
		🟢	Pure Green		3.1	3.6	520	525	530	1120	1560	120	20	10	5	50	120	5	180	-30~+85	-40~+100	
		🔴	Red		2.1	2.6	620	625	630	500	750	120	20	10	5	70	120	5	182	-30~+85	-40~+100	

*1 Pulse Width≦10 ms, Duty Ratio≦1/10

*2 See Table For Part Number Formation

*3 Axial Direction (Luminous Intensity)

*4 Please Refer to CIE 1931 Chromaticity Digram

*5 Devices are Sorted By 5nm Wavelength Ranges

Display Outline Dimensions

OSXXXX5JB4D

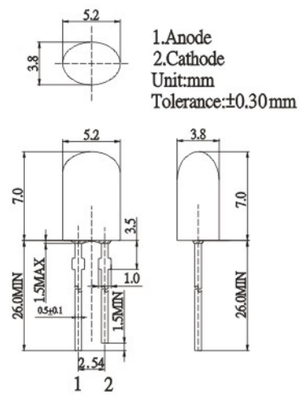

OSTBXXS2C2B

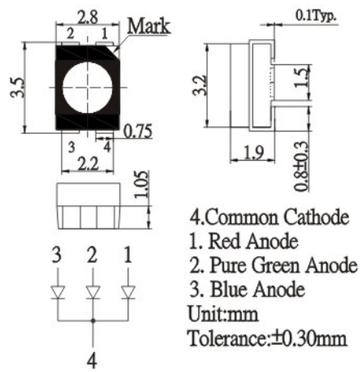

OSTBXXS4C2B

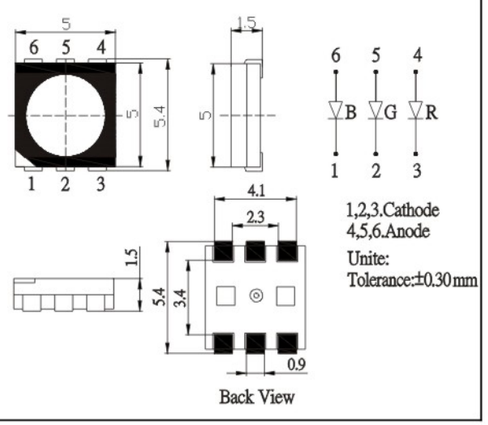

OSTBXXS5C2B

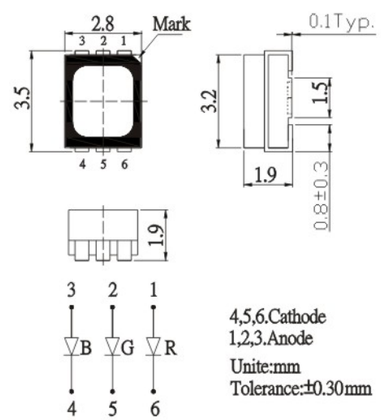

Typical Characteristics

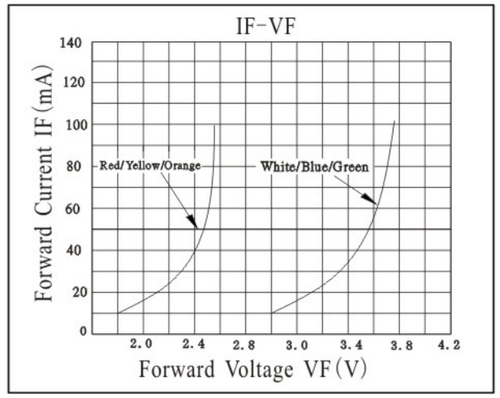

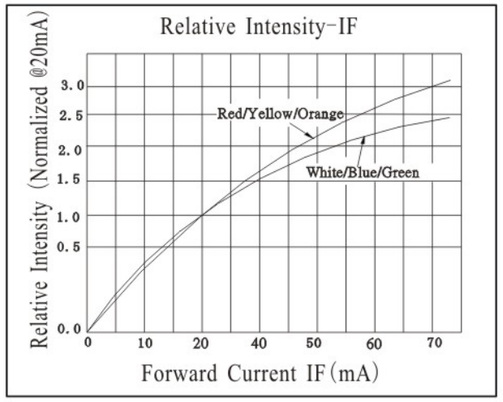

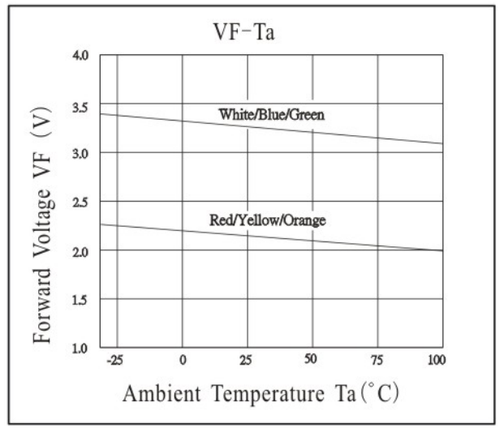

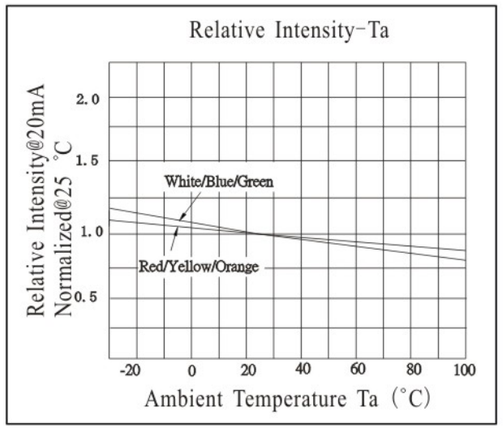

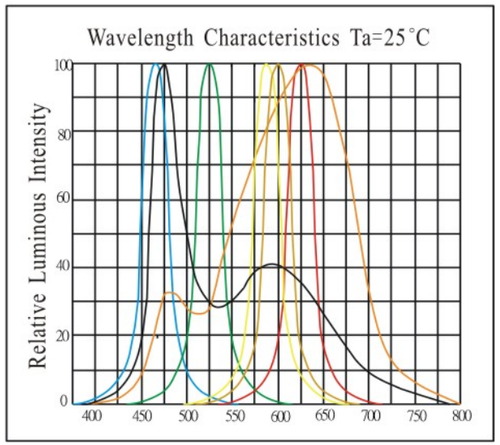

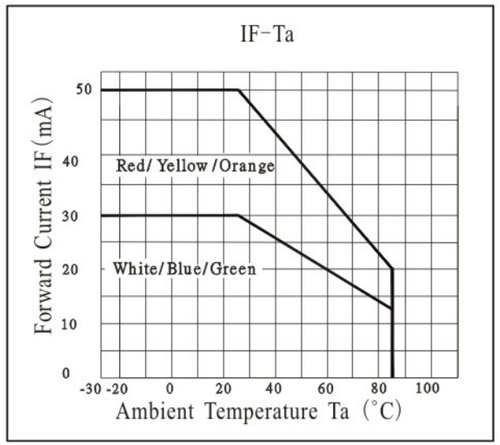

Bulk Packing

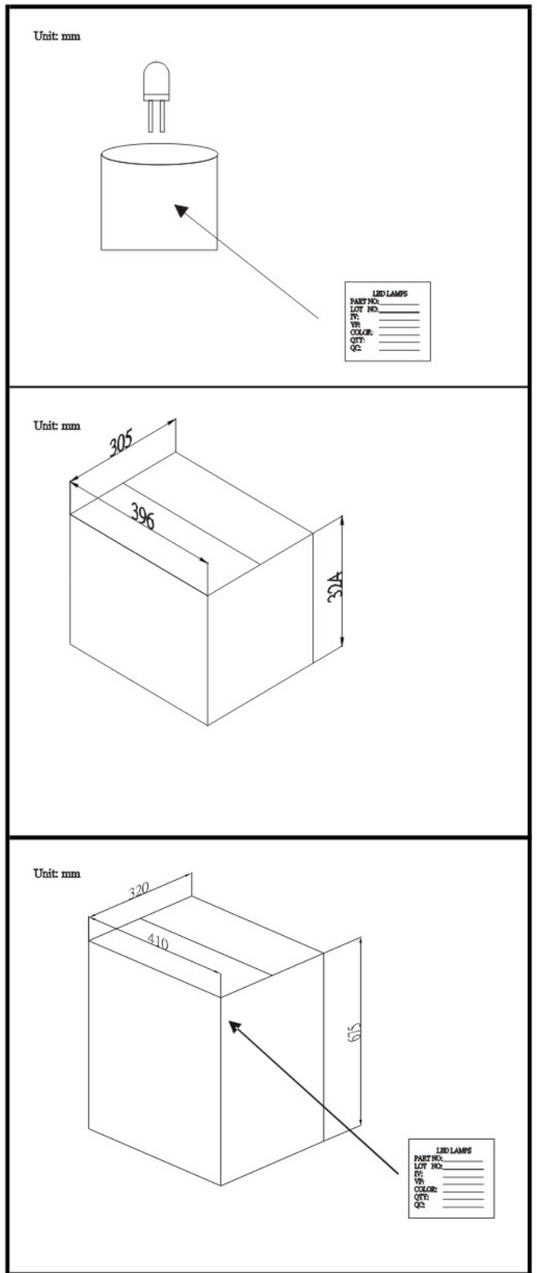

Remark:1,5mm,ESD Bag(500 pcs/Bag)
2,5mm, Box(40 Bags/Box)
3,2 Boxes/Carton

Taping Packing

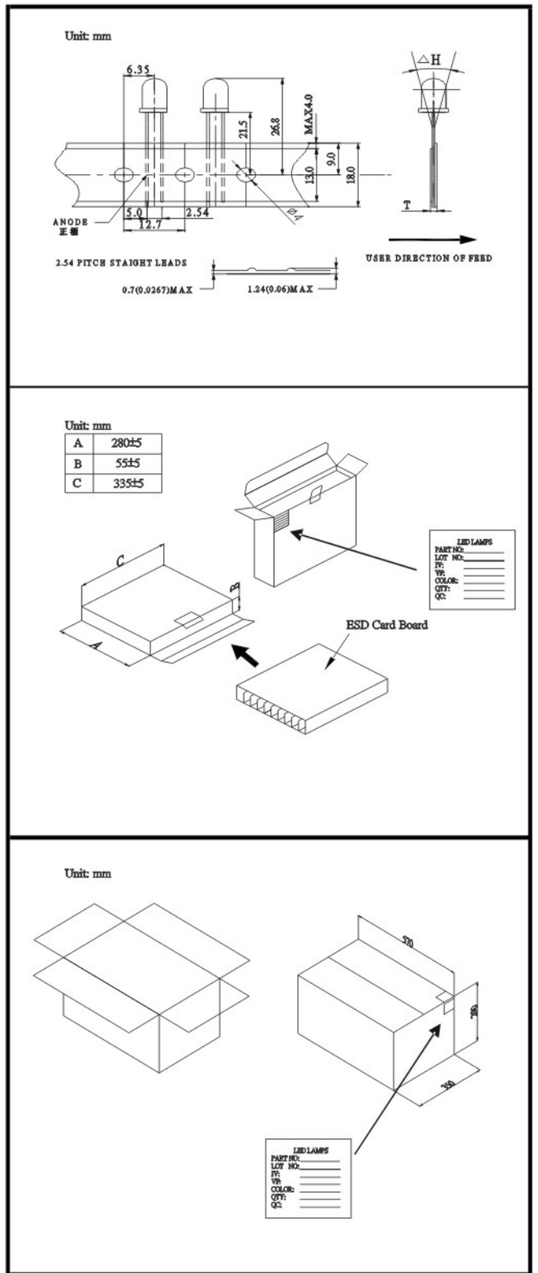

Remark:1,3mm,Box(3000 pcs/Box)
2,5mm, Box(2000 pcs/Box)
3,10 Boxes/Carton

Handling Precautions

■ Lead Forming

- When forming leads, the leads should be bent at a point at least 3mm from the base of the epoxy bulb. Do not use the base of the leadframe as a fulcrum during lead forming.
- Lead forming should be done before soldering.
- Do not apply any bending stress to the base of the lead. The stress to the base may damage the LEDs characteristics or it may break the LEDs.
- When mounting the LEDs onto a printed circuit board, the holes on the circuit board should be exactly aligned with the leads of the LEDs. If the LEDs are mounted with stress at the leads, it causes deterioration of the epoxy resin and this will degrade the LEDs.

■ Storage

- The LEDs should be stared at 30℃ or less and 70%RH or less after being shipped from Optosupply and the storage life limits are 3 months. If the LEDs are stored for 3 months or more, they can be stored for a year in a sealed container with a nitrogen atmosphere and moisture absorbent material.
- Optosupply's LEDs leadframes are silver plated Fe or Copper alloy. The silver surface may be affected by environments which contain corrosive substances. Please avoid conditions which may cause LEDs to corrode, tarnish or discolor. This corrosion or discoloration may cause difficulty during soldering operations. It is recommended that the LEDs be used as soon as possible.
- Please avoid rapid transitions in ambient temperature, especially, in high humidity environments where condensation can occur.

■ Static Electricity

- Static electricity or surge voltage damages the LEDs
  It is recommended that a wrist band or an anti-electrostatic glove be used when handling the Through Hole LEDs.
- All devices, equipment and machinery must be properly grounded. It is recommended that precautions be taken against surge voltage to the equipment that mounts the LEDs
- When inspecting the final products in which LEDs were assembled, it is recommended to check whether the assembled LEDs are damaged by static electricity or not. It is easy to find static-damaged LEDs by a light-on test or a VF test at a lower current (below 1mA is recommended).
- Damaged the LEDs will show some unusual characteristics such as the leak current remarkably increases, the forward voltage becomes lower, or the LEDs do not light at the low current.
  Criteria: (VF >2.0V at IF=0.5mA)

Soldering Conditions

■Recommended Soldering Conditions

Wave Sodering		Hand Soldering	
Pre-Heat	120℃ Max.	Temperature	350℃ Max.
Pre-Heat Time	60 seconds Max.	Soldering Time	3 seconds Max.
Solder Bath Temperature	260℃ Max.	Position	No closer than 3 mm from the base of the epoxy bulb.
Dipping Time	**5 seconds Max.**		
Dipping Position	No lower than 3mm from the base of the epoxy bulb.		

*Solder the LED No Closer than 3mm from the base of the epoxy bulb. Soldering beyond the base of the tie bar is recommended

- All Lamp Type LED products are pb-free soldering available.
- Optosupply's LEDs leadframes are silver plated Fe or Copper alloy. Careful attention should be paid during soldering.
- Although the recommended soldering conditions are specified in the above table, dip or hand soldering at the lowest possible temperature is desirable for the LEDs.
- A rapid-rate process is not recommended for cooling the LEDs .own from the peak temperature.
- Dip soldering should not be done more than one time.
- Hand soldering should not be done more than one time.
- Do not apply any stress to the lead particularly when heated.
- The LEDs must not be repositioned after soldering.
- After soldering the LEDs, the epoxy bulb should be protected from mechanical shock or vibration until the LEDs return to room temperature.
- Direct soldering onto a PC board should be avoided. Mechanical stress to the resin may be caused from Warping of the PC board or from the clinching and cutting of the leadframes. When it is absolutely necessary, the LEDs may be mounted in this fashion but the User will assume responsibility for any problems. Direct soldering should only be done after testing has confirmed that no damage, such as wire bond failure or resin deterioration, will occur. resin deterioration, will occur. Optosupply's LEDs should not be soldered directly to double sided PC boards because the heat will deteriorate the epoxy resin.
- When it is necessary to clamp the LEDs to prevent soldering failure, it is important to minimize the mechanical stress on the LEDs.
- Cut the LEDs leadframes at room temperature. Cutting the leadframes at high temperatures may cause failure of the LEDs.

■Heat Generation

- Thermal design of the end product is of paramount importance. Please consider the heat generation of the LEDs when making the system design. The coefficient of temperature increase per input electric power is affected by the thermal resistance of the circuit board and density of LEDs placement on the board, as well as other components. It is necessary to avoid intense heat generation and operating current should be decided after considering the ambient maximum temperature of LEDs.

■Cleaning

- It is recommended that isopropyl alcohol be used as a solvent for cleaning LEDs. When using other solvents, it should be confirmed beforehand whether the solvents will dissolve the resin or not. Freon solvents should not be used to clean the LEDs because of worldwide regulations.
- Do not clean the LEDs by the ultrasonic. When it is absolutely necessary, the influence of ultrasonic cleaning on the LEDs depends on factors such as ultrasonic power and the assembled condition. Before cleaning, a pre-test should be done to confirm whether any damage to LEDs will occur.

■Others

- The LED complies with RoHS and REACH Directive.
- The LED light output is strong enough to injure human eyes.Precautions must be taken to prevent looking directly at the LEDs with unaided eyes for more than a few seconds.
- Flashing lights have been known to cause discomfort in people; you can prevent this by taking precautions during use.Also, people should be cautious when using equipment that has had LEDs incorporated into it.
- The LEDs described in this brochure are intended to be used for ordinary electronic equipment (such as office equipment, communications equipment, measurement instruments and household appliances). Consult Optosupply's sales staff in advance for information on the applications in which exceptional quality and reliability are required, particularly when the failure or malfunction of the LEDs may directly jeopardize life or health (such as for airplanes, aerospace, submersible repeaters, nuclear reactor control systems, automobiles, traffic control equipment, life support systems and safety devices).
- User shall not reverse engineer by disassembling or analysis of the LEDs without having prior written consent from Optosupply. Optosupply directly before disassembling or analysis.
- The formal specifications must be exchanged and signed by both parties before large volume purchase begins.
- The appearance and specifications of the product may be modified for improvement without notice.

Surface Mount Type Packing

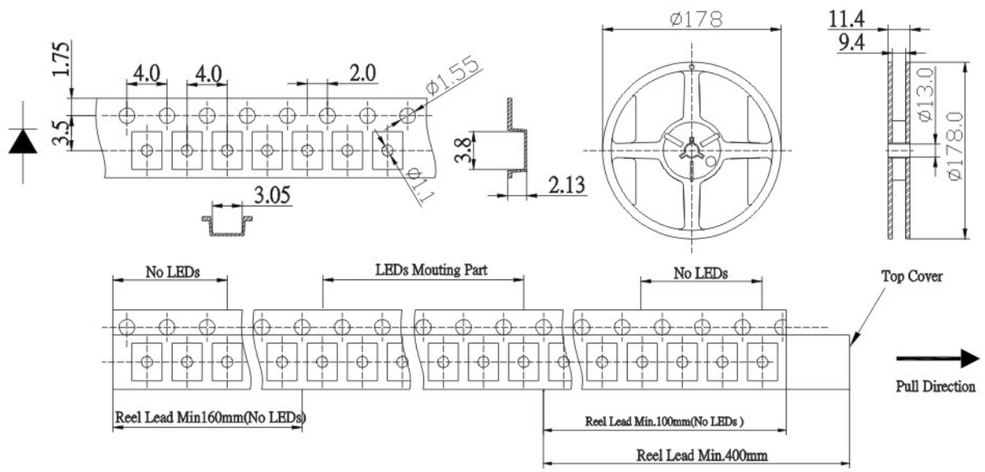

Unit:mm
Remark: 2000pcs/Reel

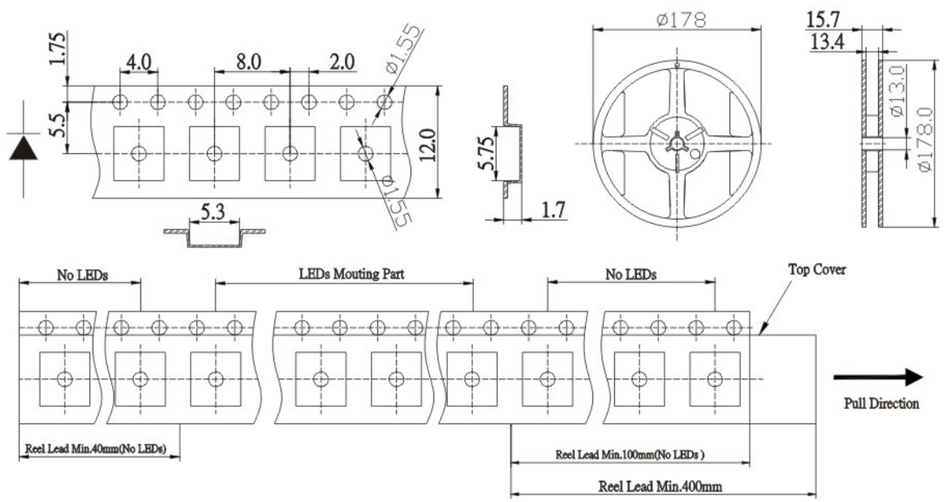

Unit:mm
Remark: 1000pcs/Reel

Handling Precautions

■Moisture Proof Package

- When moisture is absorbed into the SMT package it may vaporize and expand during soldering. There is a possibility that this can cause exfoliation of the contacts and damage to the optical characteristics of the LEDs.For this reason, the moisture proof package is used to keep moisture to a minimum in the package.
- The moisture proof package is made of an aluminum moisture proof bag.A package of a moisture absorbent material (silica gel) is inserted into the aluminum moisture proof bag. The silica gel changes its color from blue to pink as it absorbs moisture.

■Storage

- Storage Conditions
  Before opening the package :
  The LEDs should be kept at 30°C or less and 90%RH or less. The LEDs should be used within a year.When storing the LEDs, moisture proof packaging with absorbent material (silica gel) is recommended.
- After opening the package :
  Soldering should be done right after opening the package(within 24hrs).
  Keeping of a fraction, sealing and Temperature:5~40℃ Humidity:Less than 30%.
  If the package has been opened more than 1 week or the color of desiccant changes, components should be dried for 10-12hrs,at 60±5℃ .
- Optosupply LED electrode sections are comprised of a silver plated copper alloy.The silver surface may be affected by environments which contain corrosive gases and so on. Please avoid conditions which may cause the LED to corrode, tarnish or discolor. This corrosion or discoloration may cause difficulty during soldering operations. It is recommended that the User use the LEDs as soon as possible.
- Please avoid rapid transitions in ambient temperature, especially in high humidity environments where condensation can occur.

■Static Electricity

- Static electricity or surge voltage damages the LEDs.
  It is recommended that a wrist band or an anti-electrostatic glove be used when handling the LEDs.
- All devices, equipment and machinery must be properly grounded.
  It is recommended that measures be taken against surge voltage to the equipment that mounts the LEDs.

Soldering Conditions

■Recommended Soldering Conditions

Reflow Soldering		Hand Soldering	
Pre-Heat	180 ~ 200°C	Temperature Soldering time	350°C Max. 3 sec. Max. (one time only)
Pre-Heat Time	120 sec. Max.		
Peak temperature	260°C Max.		
Dipping Time	5 sec. Max.		
Condition	Refer to Temperature-profile		

*Recommended soldering conditions vary according to the type of LED

*Although the recommended soldering conditions are specified in the above table, reflow,or hand soldering at the lowest possible temperature is desirable for the LEDs.

*A rapid-rate process is not recommended for cooling the LEDs down from the peak temperature.

- All SMD LED products are pb-free soldering acailable.
- Occasionally there is a brightness decrease caused by the influence of heat or ambient atmosphere during air reflow. It is recommended that the User use the nitrogen reflow method.
- Repairing should not be done after the LEDs have been soldered. When repairing is unavoidable, a double-head soldering iron should be used. It should be confirmed beforehand whether the characteristics of the LEDs will or will not be damaged by repairing.
- Reflow soldering should not be done more than two times.
- When soldering, do not put stress on the LEDs during heating.
- After soldering, do not warp the circuit board.

Temperature-Profile(Surface of Circuit Board)

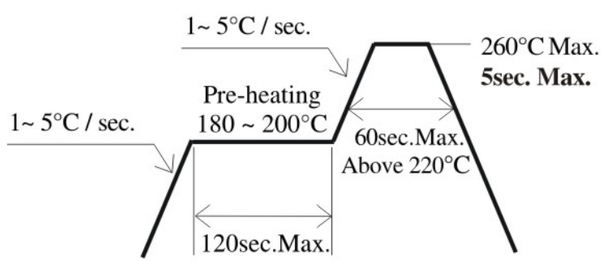

■Heat Generation

- Thermal design of the end product is of paramount importance. Please consider the heat generation of the LEDs when making the system design. The coefficient of temperature increase per input electric power is affected by the thermal resistance of the circuit board and density of LEDs placement on the board, as well as other components. It is necessary to avoid intense heat generation and operating current should be decided after considering the ambient maximum temperature of LEDs.

■Cleaning

- It is recommended that isopropyl alcohol be used as a solvent for cleaning LEDs. When using other solvents, it should be confirmed beforehand whether the solvents will dissolve the resin or not. Freon solvents should not be used to clean the LEDs because of worldwide regulations.
- Do not clean the LEDs by the ultrasonic. When it is absolutely necessary, the influence of ultrasonic cleaning on the LEDs depends on factors such as ultrasonic power and the assembled condition. Before cleaning, a pre-test should be done to confirm whether any damage to LEDs will occur.
- It is recommended to use isopropyl alcohol as a solvent for cleaning on certain LEDs. For move information about proper cleaning methods of eache LED, please refer its respective specification sheet.

■ Others

- The LED complies with RoHS and REACH Directive.
- The LED light output is strong enough to injure human eyes.Precautions must be taken to prevent looking directly at the LEDs with unaided eyes for more than a few seconds.
- Flashing lights have been known to cause discomfort in people; you can prevent this by taking precautions during use.Also, people should be cautious when using equipment that has had LEDs incorporated into it.
- The LEDs described in this brochure are intended to used for ordinary electronic equipment(such as office equipment, communications equipment, measurement instruments and household appliances). Consult Optosupply's sales staff in advance for information on the applications in which exceptional quality and reliability are required, particularly when the failure or malfunction of the LEDs may directly jeopardize life or health (such as for airplanes, aerospace, submersible repeaters, nuclear reactor control systems, automobiles, traffic control equipment, life support systems and safety devices).
- User shall not reverse engineer by disassembling or analysis of the LEDs without having prior written consent from Optosupply. Optosupply directly before disassembling or analysis.
- The formal specifications must be exchanged and signed by both parties before large volume purchase begins.
- The appearance and specifications of the product may be modified for improvement without notice.