KLS electronic
www.cnkls.com

I

Standard Din-rail Enclosure

KLS24-JG4-01-1 88*37*59mm Standard rail Enclosure

Note:

Productor Material:ABS
Surface Treatment:Smooth

Product Description:

* Product is suitable for the power module compartment, acquisition, transmitter, isolation transmitter, signal transducer transmitter etc.
* Product Standard accessories: cover, base, red retainer 1
* Box body with the hook connection, tool-free installation
* Both sides of the product can be equipped with plug-in terminal spacing 5.08 unilateral 5, a total of 10
* Fast and simple standard 35 rail fixed

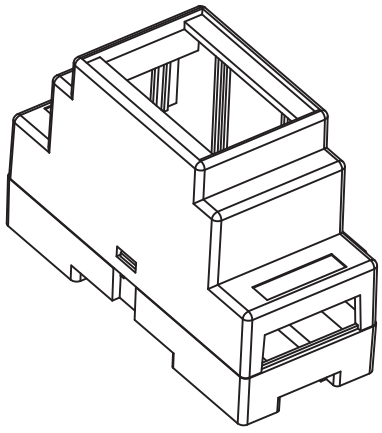

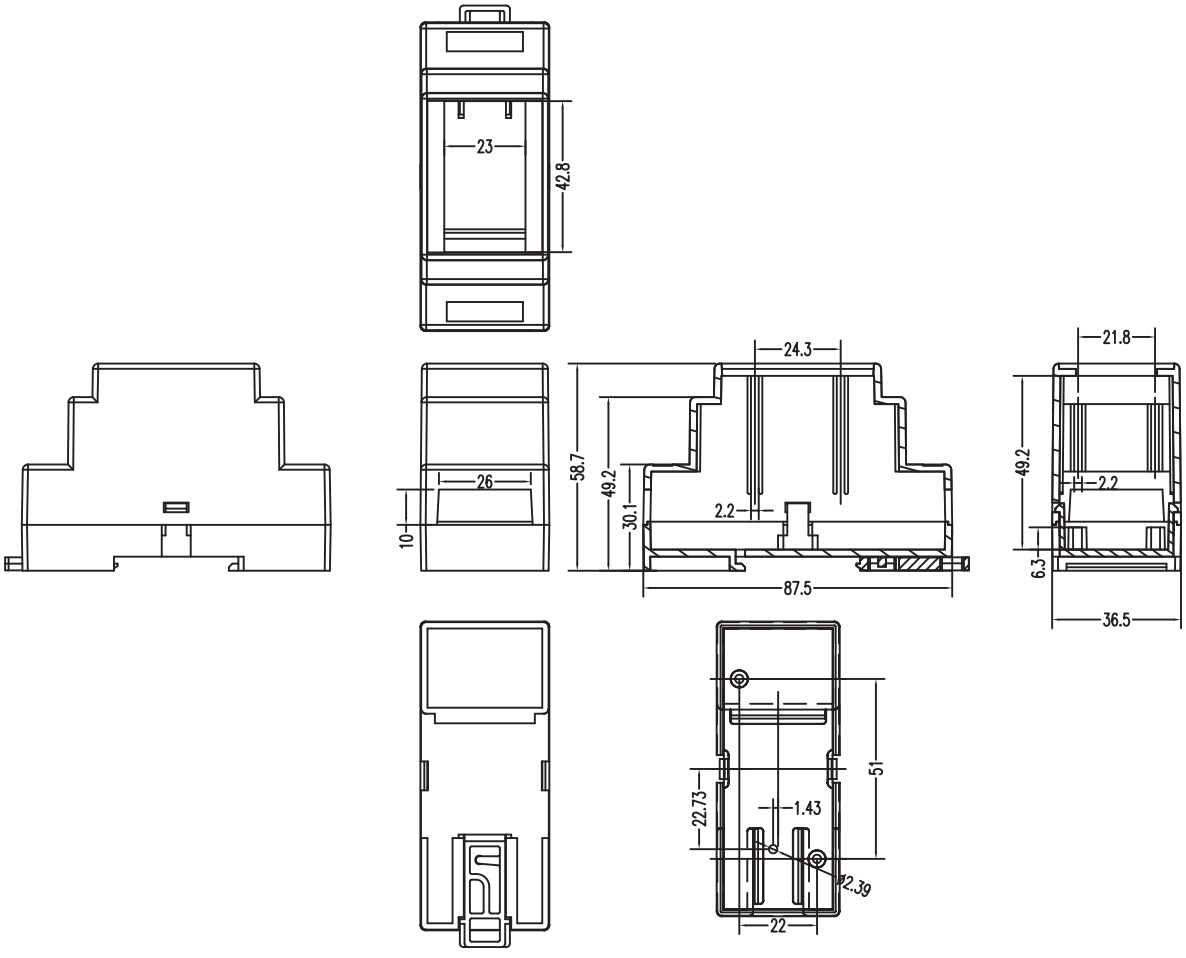

ORDER INFORMATION

Product NO.: KLS24-JG4-01-1

Pos. NO. — No.