D1RFRD006

REVISION RECORD				
REV	ECO	DESCRIPTION	DRFT	DATE
1		Drawing revise	Haoyh	03/17/06
2		增加VDE标志	LJH	12/25/07"

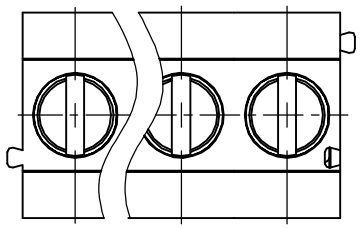

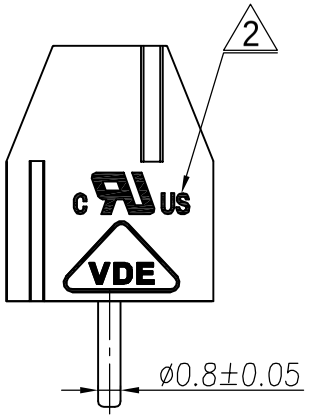

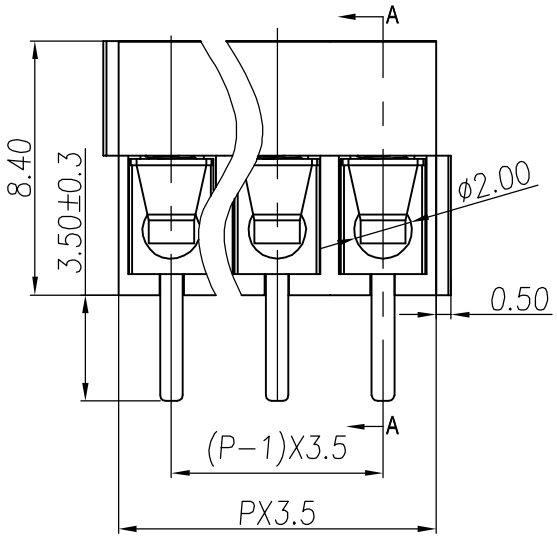

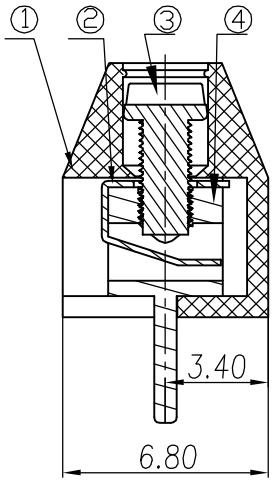

SECTION A-A

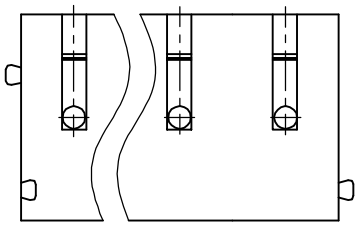

Notes:

1. Pitch:3.5mm
2. Rated voltage/current:UL 300V/10A
   VDE 130V/10A
3. Operation temperatures:-40℃～+105℃
4. Withstanding Voltage:AC1500V/1Min
5. Insulation Resistance:5000MΩ/DC1000V
6. Wire Range:24-18AWG,1.0mm²
7. Max.Torque Value:2.04kgf.cm
8. Undimensioned Tolerances:

Pitch range in mm			Naminal dimension range in mm					—
to 6	over 6 to 10	over 10 to 24	to 30	over 30 to 60	over 60 to 100	over 100 to 150	over 150	⌒ / ▱
±0.10	±0.15	±0.25	±0.2	±0.3	±0.5	±0.7	±1.0	0.05/10

ITEM	NAME OF PART	NO. OF PART	Q"TY	MATERIAL	NOTES
1	DG350-3.5-Housing	4017A0YXXA(H)	1	PA66	UL94V-0
4	DG350(A)Pin header	4017B00010(H)	XX	Brass	SnCe
3	DG350 M2"—"Screws	S000001400(H)	XX	Steel	$Cr^{3+}Zn$
2	DG350 Spring	X000000290 (H)	XX	Phosphor bronze	Ni plated

DETACHED LISTS

MM (INCH)
TOLERANCES EXCEPT AS NOTED
MM
.0 ±
.00 ±
.000 ±
ANGLES ± 1°
THIRD ANGLE PROJECTION

DFTD Haoyh DATE 04/18/'05
CHKD DATE
MFD DATE
APPVL DATE
MATERIAL :
G.E :
FINISH:
SCALE : 1:1

DEGSON®
宁波高正电子有限公司
DEGSON ELECTRONICS CO., LTD

NAME
DG350-3.5-XXP-1Y-00A(H)

DRAWING NO. DG350-3.5-E01
/PART NO.
SIZE A3
REV T2 12/25/07"
DO NOT SCALE DRAWING
SHEET 1 OF 1