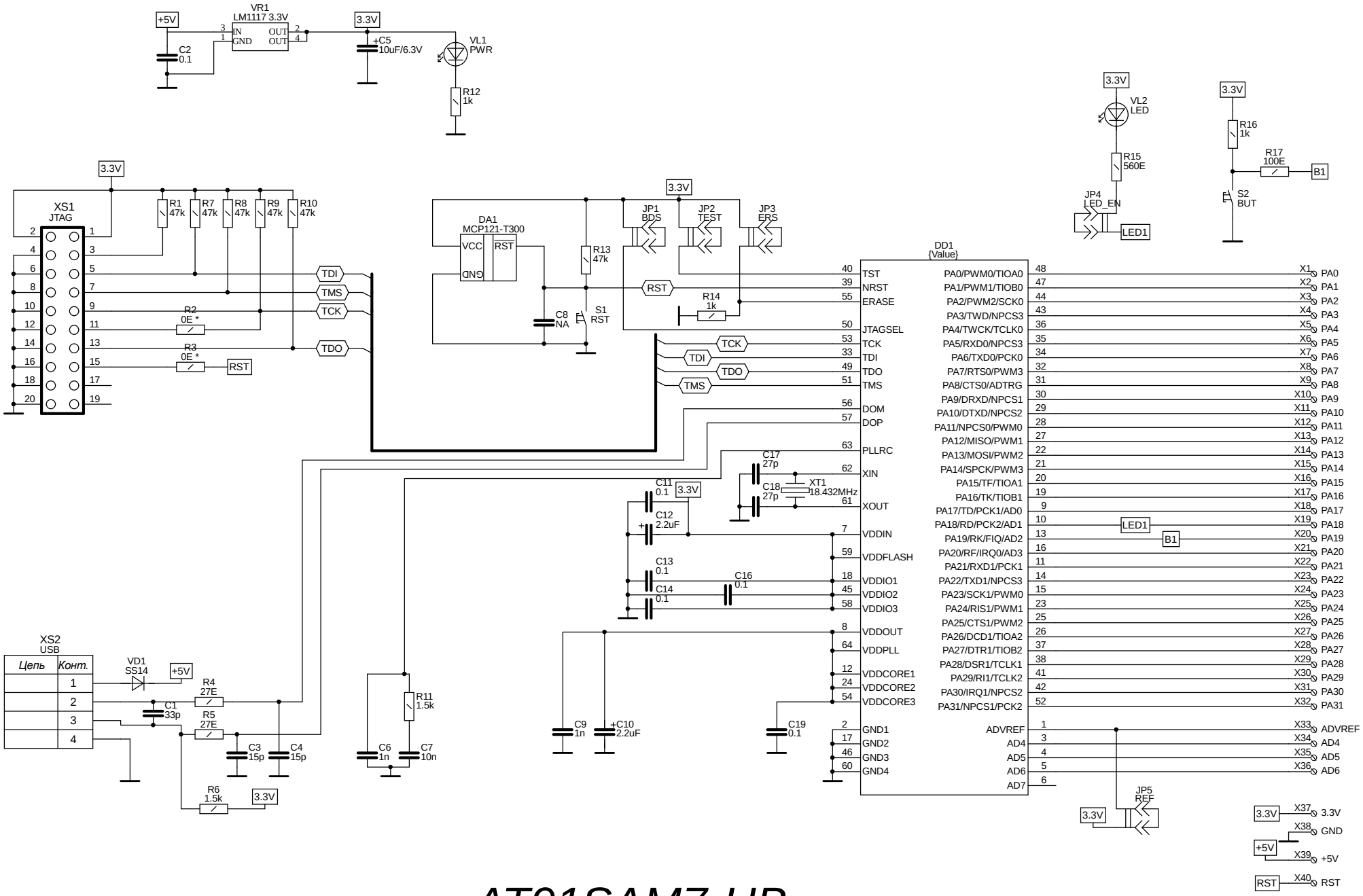
VR1
LM1117 3.3V
IN
GND
OUT
OUT
+5V
3.3V
C2
0.1
+C5
10uF/6.3V
VL1
PWR
R12
1k
VL2
LED
R15
560E
JP4
LED_EN
LED1
R16
1k
R17
100E
B1
S2
BUT
XS1
JTAG
R1
47k
R7
47k
R8
47k
R9
47k
R10
47k
R2
0E *
R3
0E *
RST
TDI
TMS
TCK
TDO
DA1
MCP121-T300
VCC
RST
GND
R13
47k
C8
NA
S1
RST
JP1
BDS
JP2
TEST
JP3
ERS
R14
1k
DD1
{Value}
TST
NRST
ERASE
JTAGSEL
TCK
TDI
TDO
TMS
DOM
DOP
PLLRC
XIN
XOUT
VDDIN
VDDFLASH
VDDIO1
VDDIO2
VDDIO3
VDDOUT
VDDPLL
VDDCORE1
VDDCORE2
VDDCORE3
GND1
GND2
GND3
GND4
C17
27p
C18
27p
XT1
18.432MHz
C11
0.1
C12
2.2uF
C13
0.1
C14
0.1
C16
0.1
C9
1n
+C10
2.2uF
C19
0.1
PA0/PWM0/TIOA0
PA1/PWM1/TIOB0
PA2/PWM2/SCK0
PA3/TWD/NPCS3
PA4/TWCK/TCLK0
PA5/RXD0/NPCS3
PA6/TXD0/PCK0
PA7/RTS0/PWM3
PA8/CTS0/ADTRG
PA9/DRXD/NPCS1
PA10/DTXD/NPCS2
PA11/NPCS0/PWM0
PA12/MISO/PWM1
PA13/MOSI/PWM2
PA14/SPCK/PWM3
PA15/TF/TIOA1
PA16/TK/TIOB1
PA17/TD/PCK1/AD0
PA18/RD/PCK2/AD1
PA19/RK/FIQ/AD2
PA20/RF/IRQ0/AD3
PA21/RXD1/PCK1
PA22/TXD1/NPCS3
PA23/SCK1/PWM0
PA24/RIS1/PWM1
PA25/CTS1/PWM2
PA26/DCD1/TIOA2
PA27/DTR1/TIOB2
PA28/DSR1/TCLK1
PA29/RI1/TCLK2
PA30/IRQ1/NPCS2
PA31/NPCS1/PCK2
ADVREF
AD4
AD5
AD6
AD7
JP5
REF
XS2
USB
Цепь
Конт.
VD1
SS14
R4
27E
C1
33p
R5
27E
C3
15p
C4
15p
R6
1.5k
R11
1.5k
C6
1n
C7
10n
X1 PA0
X2 PA1
X3 PA2
X4 PA3
X5 PA4
X6 PA5
X7 PA6
X8 PA7
X9 PA8
X10 PA9
X11 PA10
X12 PA11
X13 PA12
X14 PA13
X15 PA14
X16 PA15
X17 PA16
X18 PA17
X19 PA18
X20 PA19
X21 PA20
X22 PA21
X23 PA22
X24 PA23
X25 PA24
X26 PA25
X27 PA26
X28 PA27
X29 PA28
X30 PA29
X31 PA30
X32 PA31
X33 ADVREF
X34 AD4
X35 AD5
X36 AD6
X37 3.3V
X38 GND
X39 +5V
X40 RST

AT91SAM7-HB